# Control of the two-wheeled inverted pendulum (TWIP) robot in presence of model uncertainty and motion restriction

*Zhou Haitao*
Department of Mechatronics, Harbin Institute of Technology, Harbin, China
*Haibo Feng*
School of Mechatronics Engineering, Harbin Institute of Technology, Harbin, China
*Li Xu*
Harbin Institute of Technology, Harbin, China
*Songyuan Zhang*
School of Mechatronics Engineering, Harbin Institute of Technology, Harbin, China, and
*Yili Fu*
Robotics Institute, Harbin Institute of Technology, Harbin, China

**Abstract**

**Purpose** – The purpose of this paper is to improve control performance and safety of a real two-wheeled inverted pendulum (TWIP) robot by dealing with model uncertainty and motion restriction simultaneously, which can be extended to other TWIP robotic systems.

**Design/methodology/approach** – The inequality of lumped model uncertainty boundary is derived from original TWIP dynamics. Several motion restriction conditions are derived considering zero dynamics, centripedal force, ground friction condition, posture stability, control torque limitation and so on. Sliding-mode control (SMC) and model predictive control (MPC) are separately adopted to design controllers for longitudinal and rotational motion, while taking model uncertainty into account. The reference value of the moving velocity and acceleration, delivered to the designed controller, should be restricted in a specified range, limited by motion restrictions, to keep safe.

**Findings** – The cancelation of model uncertainty commonly existing in real system can improve control performance. The motion commands play an important role in maintaining safety and reliability of TWIP, which can be ensured by the proposed motion restriction to avoid potential movement failure, such as slipping, lateral tipping over because of turning and large fluctuation of body.

**Originality/value** – An inequation of lumped model uncertainty boundary incorporating comprehensive errors and uncertainties of system is derived and elaborately calculated to determine the switching coefficients of SMC. The motion restrictions for TWIP robot moving in 3D are derived and used to impose constraints on reference trajectory to avoid possible instability or failure of movement.

**Keywords** Model uncertainty, Motion restriction, TWIP robot, SMC, MPC

**Paper type** Research paper

## 1. Introduction

In the past few years, modeling and control of mobile robots has been sufficiently studied by many researchers in the field of both control theory and practical application (Kanayama *et al.*, 1990; Li *et al.*, 2019; Dong and Kuhnert, 2005; Huang *et al.*, 2014). In general, the mobile robots can be divided into two categories depending on whether it is statically stable or not. The first category of mobile robots possessing more than two wheels is popular for industrial application because of its static stability and simplicity of controller design. And the second category mainly includes the well-known two-wheel inverted pendulum (TWIP) robot equipped with only two driving wheels, such as SEGWAY and JOE (Grasser *et al.*, 2002). In general, the TWIP robot is small in size and can turn with zero radius, which is suitable for potential applications in narrow space, compared to the first category of mobile robots.

As for TWIP, it is characterized by dynamic stability, underactuation property and nonholonomic constraint. Also, to implement movement task, the TWIP has to track the predetermined motion trajectory, while keeping balance simultaneously, which is demonstrated to be a challenge. These characteristics make TWIP a popular experimental platform to verify various control algorithms, even though their focus is mainly on forward movement in 2D (Xu *et al.*, 2014; Chan *et al.*, 2013; Tsai *et al.*, 2010; Huang *et al.*, 2011a, 2011b; Xu *et al.*, 2013; Takei *et al.*, 2009). Several novel control schemes,

The current issue and full text archive of this journal is available on Emerald Insight at: **https://www.emerald.com/insight/0143-991X.htm**

Industrial Robot: the international journal of robotics research and application
48/1 (2021) 29–44
© Emerald Publishing Limited
[ISSN 0143-991X]
[DOI 10.1108/IR-03-2020-0064]

Received 7 April 2020
Revised 16 July 2020
8 August 2020
Accepted 10 August 2020



Downloaded from http://www.emerald.com/ir/article-pdf/48/1/29/10925789/ir-03-2020-0064en.pdf?getftrtoken=AQECAHi208BE49Ooan9kkhW_Ercy7Dm3ZL_9Cf3qfKAc485ysgAAALcwgbQGCSqGSIb3DQEHBqCBpjCBowIBADCB

Industrial Robot: the international journal of robotics research and application
Volume 48 • Number 1 • 2021 • 29 – 44

such as integrated sliding-mode control (SMC; Xu *et al.*, 2014), an adaptive method combined with radial basis-function neural networks (Tsai *et al.*, 2010), a fuzzy control scheme and the system-on-a-programmable-chip technology (Huang *et al.*, 2011a, 2011b) and a novel Takagi–Sugeno-type fuzzy logic controller (Xu *et al.*, 2013) have endowed TWIP with abilities of excellent self-balance, precise trajectory tracking or robustness to disturbance. Except for above works, other methods have been developed for TWIP to obtain satisfactory performance and adapt to a special scene, as stated in the overview literature (Chan *et al.*, 2013).

As for control of TWIP robots in 3D, there are many works done by scholars verified not only in simulation (Pathak *et al.*, 2005; Yue *et al.*, 2013; Cui *et al.*, 2015; Brisilla and Sankaranarayanan, 2015; Yue *et al.*, 2016; Rigatos *et al.*, 2020) but also in practical system (Ha and Yuta, 1996; Grasser *et al.*, 2002; Jeong and Takahashi, 2008; Takei *et al.*, 2009; Do and Seet, 2010; Huang *et al.*, 2011a, 2011b; Lin *et al.*, 2011; Muralidharan and Mahindrakar, 2014; Huang *et al.*, 2015; Dai *et al.*, 2015; Hirose *et al.*, 2016; Kim and Jung, 2016; Esmaeili *et al.*, 2017; Zhang *et al.*, 2019; Jleilaty *et al.*, 2019; Huang *et al.*, 2020). Part of these contributions are involved to little model uncertainty or external disturbance. For instance, the control scheme in Ha and Yuta (1996) consists of balance and velocity control, steering control and straight line tracking control. The works contributed by Grasser *et al.* (2002) and Takei *et al.* (2009) are all based on the linear state feedback control method. In Jeong and Takahashi (2008), the LQR method is used for TWIP. Two fuzzy controls are used by Huang *et al.* (2011a, 2011b) to achieve the desired control behavior of a real self-balancing transporter. In Dai *et al.* (2015), the sliding-mode controllers for self-balancing and yaw motion are designed independently with friction compensated. Kim and Jung (2016) adopt gain scheduling-based linear controllers to deal with the problem of drivers of different weights riding on TransBOT. In Hirose *et al.* (2016), model predictive control (MPC) is used to control the personal robot to follow the human being, while considering several types of upper and lower level constraints.

However, the model uncertainties, errors and external disturbances in actual system will deteriorate the performance of controller and drive system state to deviate from equilibrium position. To deal with this problem in terms of TWIP, approaches are usually used including formulating disturbance observer, using adaptive control or SMC control. Do and Seet (2010) adopt a disturbance observer to exponentially estimate the external disturbances. In Huang *et al.* (2015), a nonlinear disturbance observer-based dynamic surface controller is investigated to control the MWIP system. Huang *et al.* (2020) propose a new control strategy combining the high-order disturbance observer and SMC for the MWIP system. As for application of adaptive control in TWIP, Lin *et al.* (2011) use adaptive robust control to provide consistent driving performance for the HTV suffering from system uncertainties and parameter variations caused by different drivers. In Yue *et al.* (2016), the combination of MPC technique and an adaptive robust scheme for the trajectory tracking of the TWIP robot is studied. Jleilaty *et al.* (2019) adopt the model reference adaptive control to guarantee asymptotic output tracking of reference motion trajectory. SMC is a well-known nonlinear robust controller, characterized by insensitivity to model uncertainty and external disturbance. In Esmaeili *et al.* (2017), the backstepping SMC is used to balance and track trajectory of TWIP, but only considering model uncertainties and exogenous disturbance in simulation. Zhang *et al.* (2019) adopt an adaptive second-order sliding mode to control TWIP to avoid the shortcoming of "chattering" phenomenon. However, the unknown disturbance boundary is not directly given but estimated via the adaptive control law.

Opposed to these previous works, the lumped model uncertainty and errors boundary is derived and finally given via a specified inequation in this literature. Also, the boundary is used to determine the switching coefficients of SMC for longitudinal motion to improve performance. Moreover, to enable TWIP to move in 3D with high safety and reliability, the motion restrictions related to velocity and acceleration are derived and imposed on the reference trajectory. For rotational motion, MPC is used to obtain the optimal control input, as it can consider the obtained motion restriction to ensure stability in turning.

The rest of the paper is organized as follows: In Section 2, some related models for controller design is prepared, including kinematics, dynamics as well as inequality of lumped model uncertainty. The derivation of motion restriction and controller design are given in Section 3. In Section 4, two experiments are conducted on the WIP-Bot robotic system to track predefined motion trajectories. Finally, we conclude this paper and discuss the future work in Section 5 (Table 1).

## 2. Modeling of two-wheeled inverted pendulum robotic system

### 2.1 Kinematics

To derive the kinematics of TWIP, define the world frame and the inertial frame attached to the robot as $\{\mathbf{O}: \mathbf{XYZ}\}$ and $\{\mathbf{O_I}: \mathbf{X_I Y_I Z_I}\}$, respectively, as shown in Figure 1. For frame $\{\mathbf{O_I}: \mathbf{X_I Y_I Z_I}\}$, its origin is placed at the midpoint between the right wheel and left wheel with its $x$-axis pointing in the heading direction and $y$-axis along wheel axle. Define the distance that right and left wheel center traveled on the ground as $s_l = \theta_l r$, $s_r = \theta_r r$. The velocity of the left and right wheel center is hence calculated by $\dot{s}_l = \dot{\theta}_l r$ and $\dot{s}_r = \dot{\theta}_r r$, respectively. Then, we have the following motion equation:

$$\begin{bmatrix} s_o \\ \phi \end{bmatrix} = \begin{bmatrix} \frac{r}{2} & \frac{r}{2} \\ \frac{r}{2b} & -\frac{r}{2b} \end{bmatrix} \begin{bmatrix} \theta_r \\ \theta_l \end{bmatrix}, \quad \begin{bmatrix} v \\ w \end{bmatrix} = \begin{bmatrix} \dot{s}_o \\ \dot{\phi} \end{bmatrix} = \begin{bmatrix} \frac{r}{2} & \frac{r}{2} \\ \frac{r}{2b} & -\frac{r}{2b} \end{bmatrix} \begin{bmatrix} \dot{\theta}_r \\ \dot{\theta}_l \end{bmatrix} \tag{1}$$

where $s_o$ is the distance that the midpoint $O_I$ traveling on ground. $\dot{s}_o = v$ is the velocity of this midpoint, which is referred to the heading velocity $v$. $\phi$ is the heading orientation of robot in the $x$–$y$ plane and $\dot{\phi} = w$ is the rotational velocity. In addition, the TWIP robot usually suffers from kinematic constraints (holonomic and nonholonomic constraints) (Chwa *et al.*, 2002; Pathak *et al.*, 2005; Muralidharan and Mahindrakar, 2014), which can be written as:



Downloaded from http://www.emerald.com/ir/article-pdf/48/1/29/10925789/ir-03-2020-0064en.pdf?getftrtoken=AQECAHi208BE49Ooan9kkhW_Ercy7Dm3ZL_9Cf3qfKAc485ysgAAALcwgbQGCSqGSIb3DQEHBqCBpjCBowIBADCB

Industrial Robot: the international journal of robotics research and application
Volume 48 • Number 1 • 2021 • 29 – 44

**Table 1** Variables and explanations

| Notation | Definition |
|---|---|
| $\tau_r$, $\tau_l$ | Torque of the right and left driving wheels provided by motors |
| $\theta_r$, $\theta_l$ | Rotation angle of right and left wheels with respect to wheel axis |
| $\gamma$ | Tilt angle of intermediate body |
| $\phi$ | Heading orientation of robot in world frame |
| $s_r$, $s_l$ | Distance of the right and left wheels traveled on the ground |
| $s_o$ | Moving distance of the midpoint between right and left wheels |
| $v$ | Longitudinal moving velocity of robot |
| $w$ | Rotational velocity of robot with respect to $\mathbf{Z_I}$ axis |
| $(x_w, y_w)$ | Coordinate of the midpoint between two wheels |

**Figure 1** Schematics of TWIP robot

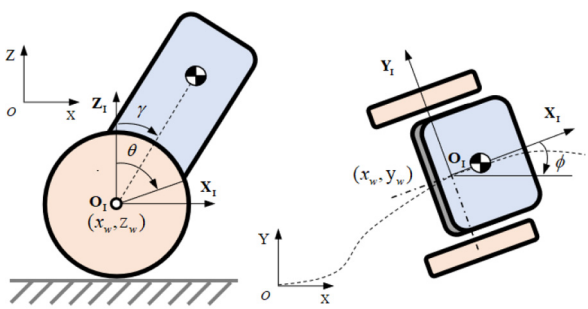


**Notes:** Lateral view; right: from top view

$$\begin{aligned} \dot{y}_w\cos\phi - \dot{x}_w\sin\phi &= 0 \\ \dot{x}_w\cos\phi + \dot{y}_w\sin\phi + b\dot{\phi} &= r\dot{\theta}_r \\ \dot{x}_w\cos\phi + \dot{y}_w\sin\phi - b\dot{\phi} &= r\dot{\theta}_l \end{aligned} \tag{2}$$

The first equation in equation (2) is the nonholonomic second-order constraint, which can be expressed in standard form as:

$$\mathbf{A}(\phi)\dot{\mathbf{q}}_0 = 0 \tag{3}$$

where $\mathbf{A}(\phi) = [-\sin\phi \ \ \cos\phi]$ and $\dot{\mathbf{q}}_0 = \begin{bmatrix}\dot{x}_w & \dot{y}_w\end{bmatrix}^T$. Define forward velocity of robot along heading direction as $\dot{s}_o = \dot{x}_w\cos\phi + \dot{y}_w\sin\phi$.

## 2.2 Dynamics

The dynamics of TWIP robot in 3D has been derived by Pathak *et al.* (2005), Huang *et al.* (2015), Yue *et al.* (2016), Ghaffari *et al.* (2016) and Huang *et al.* (2020) using Lagrange or Newton–Euler method. Following these previous researches, the dynamic equation is given as:

$$\begin{aligned} &(I_b + m_b l_c^2)\ddot{\gamma} + m_b r l_c\cos\gamma\cdot\ddot{\theta} - m_b g l_c\sin\gamma - (I_{bz} + m_b l_c^2)\sin\gamma\cos\gamma\cdot\dot{\phi}^2 + \tau_l + \tau_r + \tau_{\mathrm{f,b}} + \tau_{\mathrm{d,b}} = 0 \\ &m_b r l_c\cos\gamma\cdot\ddot{\gamma} + (2m_w r^2 + 2I_w + m_b r^2)\ddot{\theta} - m_b r l_c(\dot{\gamma}^2 + \dot{\phi}^2)\sin\gamma - \tau_l - \tau_r + \tau_{\mathrm{f,w}} + \tau_{\mathrm{d,w}} = 0 \\ &\left((I_{bz} + m_b l_c^2)\sin^2\gamma + 2I_{wz} + \frac{2b^2}{r^2}(I_w + m_w r^2)\right)\ddot{\phi} + 2(I_{bz} + m_b l_c^2)\sin\gamma\cos\gamma\cdot\dot{\phi}\,\dot{\gamma} + m_{bw}\sin\gamma\cdot\dot{\phi}\,\dot{\theta} \\ &\quad - b(\tau_l - \tau_r)/r + \tau_{\mathrm{f},\phi} + \tau_{\mathrm{d},\phi} = 0 \end{aligned} \tag{4}$$

where $\tau_{\mathrm{d,b}}$, $\tau_{\mathrm{d,w}}$ and $\tau_{\mathrm{d},\phi}$ are three disturbance torque terms arising from ground or body of robot. $\tau_{\mathrm{f,b}}$, $\tau_{\mathrm{f,w}}$ and $\tau_{\mathrm{f},\phi}$ are three friction force terms. The average rotation angle of wheel is defined as $\theta = (\theta_l + \theta_r)/2$. $\tau_v = \tau_l + \tau_r$ represents the virtual actuated torque about wheel axis to actuate $\theta$, whereas $\tau_w = b(\tau_l - \tau_r)/\mathrm{r}$ represents the control torque about rotational axis $\mathbf{Z_I}$ to drive robot to steer. $I_{bz}$ and $I_{wz}$ are the moment of inertia of body and wheel segment with respect to $\mathbf{Z_I}$ axis.

Select $\mathbf{u} = [\tau_v + \tau_w]^{\mathbf{T}} \in R^2$ as control input vector and $\boldsymbol{q} = [\gamma, \theta, \phi]^{\mathbf{T}} \in \mathrm{R}^3$ as the generalized vector with three elements: tilt angle of body, average rotation angle of the two wheels and heading orientation of robot. Solve equation (4) to obtain second-order derivative of state vector and then we get:

$$\ddot{\mathbf{q}} = \mathbf{f}(\mathbf{q}, \mathbf{q}) + \mathrm{g}(\mathrm{q},)\dot{\mathbf{q}})\cdot\mathbf{u} + \mathbf{h}(\mathbf{q}, \dot{\mathbf{q}}) \tag{5}$$

In equation (5), the corresponding nonlinear affine functions matrices or vectors have the following form:

$$\mathbf{f}(\mathbf{q},\dot{\mathbf{q}}) = \begin{bmatrix} \boldsymbol{f}_b(\mathbf{q},\dot{\mathbf{q}}) \\ \boldsymbol{f}_{\mathrm{w}}(\mathbf{q},\dot{\mathbf{q}}) \\ 0 \end{bmatrix} \in \mathrm{R}^3, \mathbf{g}(\mathbf{q},\dot{\mathbf{q}}) = \begin{bmatrix} \boldsymbol{g}_b(\mathbf{q},\dot{\mathbf{q}}) & 0 \\ \boldsymbol{g}_w(\mathbf{q},\dot{\mathbf{q}}) & 0 \\ 0 & \boldsymbol{g}_\phi(\mathbf{q},\dot{\mathbf{q}}) \end{bmatrix} \in \mathrm{R}^{3\times 2}, \mathbf{h}(\mathbf{q},\dot{\mathbf{q}}) = \begin{bmatrix} \boldsymbol{h}_b(\mathbf{q},\dot{\mathbf{q}}) \\ \boldsymbol{h}_w(\mathbf{q},\dot{\mathbf{q}}) \\ \boldsymbol{h}_\phi(\mathbf{q},\dot{\mathbf{q}}) \end{bmatrix} \in \mathrm{R}^3 \tag{6}$$

The details of elements in matrices or vectors of equation (6) are expressed as:

$$\begin{aligned} &\overline{M} = m_{bb}m_{ww} - m_{bw}^2\cos^2\gamma \\ &\boldsymbol{f}_b(\mathbf{q},\dot{\mathbf{q}}) = \overline{M}^{-1}(m_{ww}n_{bv}\sin\gamma - m_{bw}m_{bw}\sin\gamma\cos\gamma\cdot\dot{\gamma}^2) \\ &\boldsymbol{g}_b(\mathbf{q},\dot{\mathbf{q}}) = \overline{M}^{-1}(-m_{ww} - m_{bw}\cos\gamma), \boldsymbol{h}_b(\mathbf{q},\dot{\mathbf{q}}) = \overline{M}^{-1}\left(m_{ww}\tau_{\mathrm{d,b}} - m_{bw}\tau_{\mathrm{d,w}} + \Phi_{\mathrm{b}}\left(\dot{\phi}^2\right)\right) \\ &\boldsymbol{f}_w(\mathbf{q},\dot{\mathbf{q}}) = -\overline{M}^{-1}(n_{bv}m_{bw}\cos\gamma\sin\gamma - m_{bb}m_{bw}\sin\gamma\cdot\dot{\gamma}^2) \\ &\boldsymbol{g}_{\mathrm{w}}(\mathbf{q},\dot{\mathbf{q}}) = -\overline{M}^{-1}(-m_{bb} - m_{bw}\cos\gamma), \boldsymbol{h}_w(\mathbf{q},\dot{\mathbf{q}}) = \overline{M}^{-1}\left(m_{bb}\tau_{\mathrm{d,w}} - m_{bw}\tau_{\mathrm{d,b}}\cos\gamma + \Phi_{\mathrm{w}}\left(\dot{\phi}^2\right)\right) \\ &\boldsymbol{g}_\phi(\mathbf{q},\dot{\mathbf{q}}) = \frac{1}{\Theta}, \boldsymbol{h}_\phi(\mathbf{q},\dot{\mathbf{q}}) = \tau_{\mathrm{d},\phi} + \Phi_\phi(\gamma, \dot{\gamma}, \dot{\theta}) \end{aligned} \tag{7}$$

There are several constants in equation (7) that are denoted as $m_{bb} = I_b + m_b l_c^2$, $m_{bw} = m_{wb} + m_b r l_c$, $m_{ww} = 2m_w r^2 + 2I_{wz} + m_b r^2$, $n_{bv} = m_b g l_c$ and $\Theta = 2I_{wz} + 2b^2/\mathrm{r}^2(I_w + m_w r^2)$. Note that, $\mathbf{h}(\mathbf{q},\dot{\mathbf{q}})$ is the disturbance force vector with respect to $\tau_{\mathrm{f,b}}$, $\tau_{\mathrm{f,w}}$, $\tau_{\mathrm{f},\phi}$ and $\tau_{\mathrm{d,b}}$, $\tau_{\mathrm{d,w}}$, $\tau_{\mathrm{d},\phi}$. For simplicity, we also add the coupled dynamics into it to regard it as part of model uncertainty, $\Phi_{\mathrm{b}}$, $\Phi_{\mathrm{w}}$, $\Phi_\phi$.

## 2.3 Nonlinear state equation including model uncertainty

To apply the designed controller into a real robotic systems, it is unavoidable to confront the mismatch issue between real system and its mathematical model (Xu *et al.*, 2014; Zhang *et al.*, 2019; Huang *et al.*, 2020). The mismatch, referred to lumped model uncertainties in this paper, includes dynamics parameter uncertainty, unmodeled dynamics, wheel actuator friction, ground friction, sensor error, external disturbance and so on. We use $\bullet$ and $\hat{\bullet}$ to represent parameters of nominal system and real system, respectively. Hence, the nonlinear affine function $\mathbf{f}(\mathbf{q},\dot{\mathbf{q}})$, $\mathbf{g}(\mathbf{q},\dot{\mathbf{q}})$ in equation (6) can be represented by $\mathbf{f}(\mathbf{q},\dot{\mathbf{q}}) = \hat{\mathbf{f}}(\mathbf{q},\dot{\mathbf{q}}) + \Delta\mathbf{f}(\mathbf{q},\dot{\mathbf{q}})$, $\mathbf{g}(\mathbf{q},\dot{\mathbf{q}}) = \hat{\mathbf{g}}(\mathbf{q},\dot{\mathbf{q}}) + \Delta g(\mathbf{q},\dot{\mathbf{q}})\Delta\mathbf{f}(\mathbf{q},\dot{\mathbf{q}})$, $\Delta\mathbf{q}(\mathbf{q},\dot{\mathbf{q}})$ are lumped model uncertainty



Downloaded from http://www.emerald.com/ir/article-pdf/48/1/29/10925789/ir-03-2020-0064en.pdf?getftrtoken=AQECAHi208BE49Ooan9kkhW_Ercy7Dm3ZL_9Cf3qfKAc485ysgAAALcwgbQGCSqGSIb3DQEHBqCBpjCBowIBADCB

terms. $\hat{\mathbf{f}}(\mathbf{q},\dot{\mathbf{q}}), \hat{\mathbf{g}}(\mathbf{q},\dot{\mathbf{q}})$ is the estimation of the nominal dynamics. Equation (6) can be extended for real robotic system considering model uncertainty, rewritten as:

$$\ddot{\mathbf{q}} = \hat{\mathbf{f}}(\mathbf{q},\dot{\mathbf{q}}) + \Delta\mathbf{f}(\mathbf{q},\dot{\mathbf{q}}) + (\hat{\mathbf{g}}(\mathbf{q},\dot{\mathbf{q}}) + \Delta\mathbf{g}(\mathbf{q},\dot{\mathbf{q}})) \cdot \mathbf{u} + \hat{\mathbf{h}}(\mathbf{q},\dot{\mathbf{q}}) \tag{8}$$

where details of several vectors and matrices are expressed as:

$$\hat{\mathbf{f}}(\mathbf{q},\dot{\mathbf{q}}) = \begin{bmatrix} \hat{f}_b(\mathbf{q},\dot{\mathbf{q}}) \\ \hat{f}_w(\mathbf{q},\dot{\mathbf{q}}) \\ 0 \end{bmatrix} \in \mathrm{R}^3,\ \Delta\mathbf{f}(\mathbf{q},\dot{\mathbf{q}}) = \begin{bmatrix} \Delta\mathbf{f}_b(\mathbf{q},\dot{\mathbf{q}}) \\ \Delta f_{\mathbf{w}}(\mathbf{q},\dot{\mathbf{q}}) \\ \Delta f_{\phi}(\mathbf{q},\dot{\mathbf{q}}) \end{bmatrix} \in \mathrm{R}^3,$$

$$\hat{\mathbf{g}}(\mathbf{q},\dot{\mathbf{q}}) = \begin{bmatrix} \hat{g}_b(\mathbf{q},\dot{\mathbf{q}}) & 0 \\ \hat{g}_w(\mathbf{q},\dot{\mathbf{q}}) & 0 \\ 0 & \hat{g}_\phi(\mathbf{q},\dot{\mathbf{q}}) \end{bmatrix} \in \mathrm{R}^{3\times 2}$$

$$\Delta\mathbf{g}(\mathbf{q},\dot{\mathbf{q}}) = \begin{bmatrix} \Delta g_b(\mathbf{q},\dot{\mathbf{q}}) & 0 \\ \Delta g_w(\mathbf{q},\dot{\mathbf{q}}) & 0 \\ 0 & \Delta g_\phi(\mathbf{q},\dot{\mathbf{q}}) \end{bmatrix} \in \mathrm{R}^{3\times 2},$$

$$\hat{\mathbf{h}}(\mathbf{q},\dot{\mathbf{q}}) = \begin{bmatrix} \hat{h}_{\mathbf{b}}(\mathbf{q},\dot{\mathbf{q}}) \\ \hat{h}_{\mathbf{w}}(\mathbf{q},\dot{\mathbf{q}}) \\ \hat{h}_{\phi}(\mathbf{q},\dot{\mathbf{q}}) \end{bmatrix} \in \mathrm{R}^3 \tag{9}$$

Although it is generally impossible to obtain accurate dynamics of a real system, the dynamics parameters, external disturbance and friction can be estimated in a specified work condition via system identification or direct measurement. For equation (9), assume all uncertainty terms can be bounded by:

$$|\Delta f_b(\mathbf{q},\dot{\mathbf{q}})| \le \kappa_{fb},\ |\Delta f_w(\mathbf{q},\dot{\mathbf{q}})| \le \kappa_{fw},\ |\Delta f_\phi(\mathbf{q},\dot{\mathbf{q}})| \le \kappa_{f\phi},\ |\Delta g_{\mathbf{b}}(\mathbf{q},\dot{\mathbf{q}})| \le \kappa_{gb},\ |\Delta g_{\mathbf{w}}(\mathbf{q},\dot{\mathbf{q}})| \le \kappa_{gw},$$
$$|\Delta g_\phi(\mathbf{q},\dot{\mathbf{q}})| \le \kappa_{g\phi},\ |\hat{h}_b(\mathbf{q},\dot{\mathbf{q}})| \le \kappa_{hb},\ |\hat{h}_{\mathbf{w}}(\mathbf{q},\dot{\mathbf{q}})| \le \kappa_{hw},\ |\hat{h}_\phi(\mathbf{q},\dot{\mathbf{q}})| \le \kappa_{h\phi} \tag{10}$$

where $\kappa_{fb}$, $\kappa_{fw}$, $\kappa_{f\phi}$, $\kappa_{gb}$, $\kappa_{gw}$, $\kappa_{g\phi}$, $\kappa_{hb}$, $\kappa_{hw}$ and $\kappa_{h\phi}$ are a set of positive constants. Assume all existing uncertainty is matched, which means that these uncertainties can be completely canceled by control input (Xu *et al.*, 2014). Also, $\hat{\mathbf{g}}(\mathbf{q},\dot{\mathbf{q}})$ is usually within a specified range in common work condition and assume the following matching conditions can be satisfied:

$$\begin{aligned} \Delta\mathbf{f}(\mathbf{q},\dot{\mathbf{q}}) &= \hat{\mathbf{g}}(\mathbf{q},\dot{\mathbf{q}}) \cdot \delta\mathbf{f}(\mathbf{q},\dot{\mathbf{q}}) \\ \Delta\mathbf{g}(\mathbf{q},\dot{\mathbf{q}})\mathbf{u} &= \hat{\mathbf{g}}(\mathbf{q},\dot{\mathbf{q}}) \cdot \delta\mathbf{g}(\mathbf{q},\dot{\mathbf{q}}) \\ \hat{\mathbf{h}}(\mathbf{q},\dot{\mathbf{q}}) &= \hat{\mathbf{g}}(\mathbf{q},\dot{\mathbf{q}}) \cdot \delta\mathbf{h}(\mathbf{q},\dot{\mathbf{q}}) \end{aligned} \tag{11}$$

Combining equations (8) and (11), the nonlinear state equation including matching uncertainties can be derived as:

$$\ddot{\mathbf{q}} = \hat{\mathbf{f}}(\mathbf{q},\dot{\mathbf{q}}) + \hat{\mathbf{g}}(\mathbf{q},\dot{\mathbf{q}}) \cdot (\mathbf{u} + \delta\eta(\mathbf{q},\dot{\mathbf{q}})) \tag{12}$$

where $\delta\eta(\mathbf{q},\dot{\mathbf{q}}) = \begin{bmatrix} \delta\eta_b & \delta\eta_w & \delta\eta_\phi \end{bmatrix}^{\mathrm{T}} \in \mathrm{R}^3$ is the lumped matched model uncertainty vector of system, which can be computed by $\delta\eta(\mathbf{q},\dot{\mathbf{q}}) = \delta\mathbf{f}(\mathbf{q},\dot{\mathbf{q}}) + \delta\mathbf{g}(\mathbf{q},\dot{\mathbf{q}}) + \delta\mathbf{h}(\mathbf{q},\dot{\mathbf{q}})$. Also, $|\delta\eta(\mathbf{q},\dot{\mathbf{q}})|$ is bounded by these three uncertainty terms given as follows:

$$\begin{aligned} |\delta\eta(\mathbf{q},\dot{\mathbf{q}})| &= |\delta\mathbf{f}(\mathbf{q},\dot{\mathbf{q}}) + \delta\mathbf{g}(\mathbf{q},\dot{\mathbf{q}}) + \delta\mathbf{h}(\mathbf{q},\dot{\mathbf{q}})| \\ &\le |\delta\mathbf{f}(\mathbf{q},\dot{\mathbf{q}})| + |\delta\mathbf{g}(\mathbf{q},\dot{\mathbf{q}})| + |\delta\mathbf{h}(\mathbf{q},\dot{\mathbf{q}})| \end{aligned} \tag{13}$$

By combining equations (10), (11) and (13), the inequation of lumped uncertainty boundary can be finally calculated by

$$|\delta\eta_b| \le \frac{\kappa_{fb} + \kappa_{gb} + \kappa_{hb}}{|\hat{g}_b(\mathbf{q},\dot{\mathbf{q}})|_{\min}},\ |\delta\eta_w| \le \frac{\kappa_{fw} + \kappa_{gw} + \kappa_{hw}}{|\hat{g}_{\mathbf{w}}(\mathbf{q},\dot{\mathbf{q}})|_{\min}},$$
$$|\delta\eta_\phi| \le \frac{\kappa_{f\phi} + \kappa_{g\phi} + \kappa_{h\phi}}{|\hat{g}_\phi(\mathbf{q},\dot{\mathbf{q}})|_{\min}} \tag{14}$$

In equation (14), $\delta_{\eta b}$, $\delta_{\eta w}$ and $\delta_{\eta\phi}$ are all matched model uncertainties, which can be completely alleviated by specifically designed control input (Xu *et al.*, 2014). The above derivation of dynamics as well as lumped model uncertainty boundary will be decoupled into the longitudinal and rotational motion to design controller in the next section. $\times[\bullet]$ represents the $\bullet$th element of vector $\times$.

## 3. Proposed control approach

### 3.1 Motion restrictions

Consider a case that the TWIP is moving with a fixed forward acceleration $\dot{v}$, as shown on the left of Figure 2. As the current center of gravity of body deviates from the equilibrium position right above wheel axis, the TWIP has to accelerate continuously to maintain the current posture of body. Because of the underactuated property, the longitudinal motion state of TWIP can be governed by the zero dynamics in Yue *et al.* (2013), also referred to the dynamics constraint by Kim and Kwon (2020). By combining the first and second equations in equation (4) to cancel control torque, the zero dynamics is obtained as:

$$\begin{aligned} (m_{bb} + m_{bw}\cos\gamma)\ddot{\gamma} + (m_{ww} + m_{bw}\cos\gamma)\ddot{\theta} - n_{bv}\sin\gamma \\ - m_{bv}\dot{\gamma}2\sin\gamma = 0 \end{aligned} \tag{15}$$

In equation (15), the tilt angle is fixed and $\dot{\gamma} = 0, \ddot{\gamma} = 0$ is satisfied. Hence, with the assumption of motion duration as $T_f$, the forward acceleration is calculated by:

$$\dot{v}(t) = \frac{n_{bv} r \sin\gamma(t)}{m_{vvw} + m_{bw}\cos\gamma(t)}, \quad s.t.\ |\gamma(t)| \le \gamma_{\max},\ \forall t \in [0, T_f] \tag{16}$$

Furthermore, using the principle of moment balance to analyze body of TWIP with respect to wheel axis in the above moving case, the moment balance equation is written as:

$$m_b g l_c \sin\gamma(t) - m_b \dot{v}(t) l_c \cos\gamma(t) = \tau_v(t) \tag{17}$$

Solve equation (17) and we have:

$$\begin{aligned} \dot{v}(t) = g\tan\gamma(t) - \frac{\tau_v(t)}{m_b l_c \cos\gamma(t)} \quad s.t.\ |\gamma(t)| \le \gamma_{\max},\ |\tau_v(t)| \\ \le \tau_{v,\max},\ \forall t \in [0, T] \end{aligned} \tag{18}$$

From the above analysis, $\dot{v}(t)$ and $\gamma(t)$ can be governed by equation (16) (Yue *et al.*, 2013). Then, the required control torque $\tau_v(t)$ to keep balance can be calculated by equation (18). Their relationships are intuitively indicated on the right of Figure 2 in 3D plot. Note that, because both $\tau_v(t)$ and $\gamma(t)$ must be limited in real application of TWIP system, the boundary of $\dot{v}(t)$ can be hence calculated by combining equations (16) and (18):



Downloaded from http://www.emerald.com/ir/article-pdf/48/1/29/10925789/ir-03-2020-0064en.pdf?getftrtoken=AQECAHi208BE49Ooan9kkhW_Ercy7Dm3ZL_9Cf3qfKAc485ysgAAALcwgbQGCSqGSIb3DQEHBqCBpjCBowIBADCB

Industrial Robot: the international journal of robotics research and application
Volume 48 • Number 1 • 2021 • 29 – 44

**Figure 2** Analysis of TWIP robot moving with a constant acceleration $\dot{v} = \ddot{\theta} r$ over a period of time

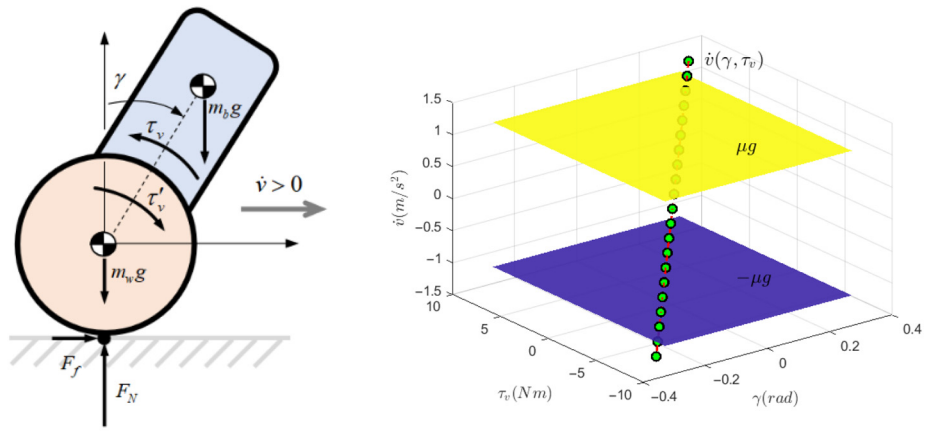


**Notes:** Left: force analysis of TWIP robot in current motion state; right: the relationship between $\gamma$, $\tau_v$ and $\dot{v}$ indicated in 3D plot

Also, to avoid slipping occurring between wheel and ground, the ground friction condition should be satisfied, $F_f \leq \mu F_N$. The vertical ground force and the friction force are $F_N = (m_b + 2m_w)g$ and $F_f = (m_b + 2m_w)\dot{v}$, respectively. Therefore, the forward acceleration boundary associated with friction condition can be expressed as:

$$|\dot{v}(t)| \leq \mu g, \quad s.t.\ \forall t \in [0, T_f] \tag{19}$$

where the friction coefficient is selected as 1.1 in our case. The control torque provided by wheel motor is bounded by:

$$|\tau_v(t)| \leq \tau_{v,\max}, \quad s.t.\ \forall t \in [0, T_f] \tag{20}$$

Also, to keep body posture stable, the tilt angle is expected to be within a small range:

$$|\gamma(t)| \leq \gamma_{\max}, \quad s.t.\ \forall t \in [0, T_f] \tag{21}$$

Consider another case that the TWIP robot is moving in the $x$–$y$ plane at radius $R$ as shown on the left of Figure 3. The centripedal force because of turning can be calculated by:

$$F_{centri}(t) = (m_b + 2m_w)\ddot{y}_{centri}(t),\ \ddot{y}_{centri}(t) = \frac{v(t)^2}{R} = w(t)^2 R = v(t)w(t), \quad s.t.\ \forall t \in [0, T_f] \tag{22}$$

where $y_{centri}(t)$ is the centripetal acceleration acting on the center of mass of the whole robot at time $t$. Too large a value of $\ddot{y}_{centri}(t)$ may cause the robot to tip over in lateral direction. Hence, to avoid this unstable factor, the centripetal acceleration should be bounded by:

$$|\ddot{y}_{centri}(t)| = |v(t)w(t)| \leq \ddot{y}_{centri,\max}, \quad s.t.\ |v(t)| \leq v_{\max},\ |w(t)| \leq w_{\max},\ \forall t \in [0, T_f] \tag{23}$$

where $\ddot{y}_{centri,\max}$ is the allowable maximal value of $\ddot{y}_{centri}(t)$. In our research, we select $y_{centri,\max}$ as 0.1 times of acceleration of gravity to ensure a relatively large stability margin.

Furthermore, in common work condition, the forward velocity is bounded by:

$$|v(t)| \leq v_{\max}, \quad s.t.\ \forall t \in [0, T_f] \tag{24}$$

While the rotational velocity is restricted by:

$$|w(t)| \leq w_{\max}, \quad s.t.\ \forall t \in [0, T_f] \tag{25}$$

As shown on the right of Figure 3, the $v$–$w$ plot is given while considering three velocity constraints in equations (23)–(25). In Area I, only the rotational velocity is over the maximum limit, whereas in Area IV, only the forward velocity is beyond the maximum limit. For Area III, although every single velocity is within the maximum restriction, the centrifugal acceleration exceeds the allowable value determined by centrifugal acceleration. Area II is hence the safe and expected work condition satisfying the stable movement constraints.

Also, because of limited rotational control torque, the rotational acceleration is bounded by:

$$|\dot{w}(t)| \leq \dot{w}_{\max}, \quad \forall t \in [0, T_f] \tag{26}$$

To derive the motion restrictions for TWIP, including forward velocity and rotational velocity as well as its derivative, we can follow the procedure depicted in Figure 4 to calculate the final boundary of it. Once it has been obtained, the following reference trajectory generator can produce a motion trajectory within these motion restrictions to ensure reliability and safety.

### 3.2 Control architecture

The complete control framework for TWIP robot in this paper can be illustrated in Figure 5, which mainly consists of the reference trajectory generator, the SMC and MPC controller, model uncertainty and motion restrictions as well as the real system WIP-Bot. The outputs of the reference trajectory generator within motion restrictions includes six reference state variables $\left(\gamma_{ref}, \dot{\gamma}_{ref}, \theta_{ref}, \dot{\theta}_{ref}, \phi_{ref}, \dot{\phi}_{ref}\right)$ and will be delivered into the following SMC and MPC controller. Also, the joystick. can be used as an alternative to send motion commands to robot, which are also restricted by maximum velocity as well as maximum acceleration to ensure safety. The controller for the longitudinal and rotational movement is separately designed in Sections 3.2.1 and 3.2.2 in detail. The decoupling matrix is used to transfer these two virtual control inputs $\tau_v$ and $\tau_w$ into the right and left wheel motor torque $\tau_l$ and $\tau_r$ (Grasser *et al.*, 2002):



Downloaded from http://www.emerald.com/ir/article-pdf/48/1/29/10925789/ir-03-2020-0064en.pdf?getftrtoken=AQECAHi208BE49Ooan9kkhW_Ercy7Dm3ZL_9Cf3qfKAc485ysgAAALcwgbQGCSqGSIb3DQEHBqCBpjCBowIBADCB

Industrial Robot: the international journal of robotics research and application
Volume 48 • Number 1 • 2021 • 29 – 44

**Figure 3** Analysis of TWIP moving in the *x–y* plane

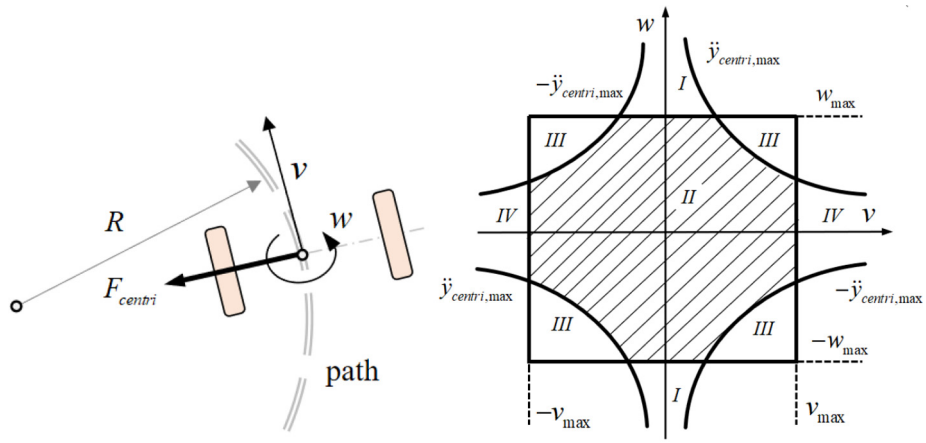


**Notes:** Left: schematics of TWIP turning at radius, $R(t) = v(t)/w(t)$; right: The $v - w$ plot describes the relationship between forward velocity $v(t)$ and rotational velocity $w(t)$

$$\begin{bmatrix} \tau_l \\ \tau_r \end{bmatrix} = \begin{bmatrix} \frac{1}{2} & \frac{r}{2b} \\ \frac{1}{2} & -\frac{r}{2b} \end{bmatrix} \begin{bmatrix} \tau_v \\ \tau_w \end{bmatrix} \tag{27}$$

For the following control synthesis of TWIP in 3D, the whole dynamics is decoupled into two independent sub-system, the longitudinal system and rotational system, the approach of which has been used by Grasser *et al.* (2002), Lin *et al.* (2011) and Yue *et al.* (2016).

### 3.3 Longitudinal motion control

For longitudinal movement, there are two degree of freedoms (DoFs) but only one control input, which is the type of underactuated system. To analyze it, the state vector is selected as $\mathbf{x_v} = [x_1, x_2, x_3, x_4]^{\mathrm{T}} = [\mathbf{q}[1], \dot{\mathbf{q}}[1], \mathbf{q}[2], \dot{\mathbf{q}}[2]]^{\mathrm{T}}$ and the corresponding reference state vector can be specified as $\mathbf{x_{v,ref}} = [x_{1,ref}, x_{2,ref}, x_{3,ref}, x_{4,ref}]^{\mathrm{T}} = \left[\gamma^*, 0, \theta_{ref}, \dot{\theta}_{ref}\right]^{\mathrm{T}}$. The tilt angle at equilibrium position $\gamma^*$ is defined as reference tilt angle, where the center of mass of the intermediate body is right above the contact point between wheel and ground. $\dot{\theta}_{ref}$ is the reference angular velocity of the wheel. Also, the reference wheel rotation angle must satisfy $\theta_{ref} = \int \dot{\theta}_{ref} dt$ to provide a suitable control command for system. The error of state vector can be expressed as:

$$\begin{aligned} \tilde{\mathbf{x}}_{\mathbf{v}} &= \mathbf{x_v} - \mathbf{x_{v,ref}} = [\tilde{x}_1, \tilde{x}_2, \tilde{x}_3, \tilde{x}_4]^{\mathrm{T}} \\ &= \left[\gamma - \gamma^*, \dot{\gamma}, \theta - \theta_{ref}, \dot{\theta} - \dot{\theta}_{ref}\right]^{\mathrm{T}} \end{aligned} \tag{28}$$

Based on the above analysis, the nonlinear state-space equation for longitudinal movement, including the matched uncertainty terms, can be formulated as:

$$\dot{\tilde{\mathbf{x}}}_{\mathbf{v}} = \hat{\mathbf{f}}_{\mathbf{v}} + \hat{\mathbf{g}}_{\mathbf{v}} \cdot (\mathbf{u}[1] + \boldsymbol{\delta\eta}_{\mathbf{v}}) \tag{29}$$

with

$$\hat{\mathbf{f}}_{\mathbf{v}} = \begin{bmatrix} x_2 - x_{2,ref} \\ \hat{f}_b \\ x_4 - x_{4,ref} \\ \hat{f}_w \end{bmatrix} \in \mathrm{R}^4, \ \hat{\mathbf{g}}_{\mathbf{v}} = \begin{bmatrix} 0 \\ \hat{g}_b \\ 0 \\ \hat{g}_w \end{bmatrix} \in \mathrm{R}^4,$$

$$\boldsymbol{\delta\eta}_{\mathbf{v}} = \begin{bmatrix} 0 \\ \delta\eta_b \\ 0 \\ \delta\eta_w \end{bmatrix} \in \mathrm{R}^4 \tag{30}$$

SMC is characterized by robustness and insensitivity to system uncertainties, which is suitable for control synthesis of a practical system. The state evolution of SMC consists of the reaching phase and the sliding-mode phase. In the reaching phase, the system state will approach to the specified sliding surface $s = \mathbf{c}\tilde{\mathbf{x}}_{\mathbf{v}}$ following the reaching law. Once the system state has been kept in linear sliding surface, it will be controlled to converge to the equilibrium point and the dynamic performance is only determined by the selected control gains $\mathbf{c} = [c_1\ c_2\ c_3\ 1] \in \mathrm{R}^4$. Take the derivative of $s$ and we select a constant approach law as:

$$\dot{s} = \mathbf{c}\dot{\tilde{\mathbf{x}}}_{\mathbf{v}} = -\varepsilon \cdot \mathrm{sgn}(s) \tag{31}$$

In equation (31), $\varepsilon$ is the switching coefficients of SMC and $\mathrm{sgn}(\cdot)$ is the sign function. Equation (31) can be rewritten in detail as:

**Figure 4** Diagram of derivation of motion restrictions for TWIP

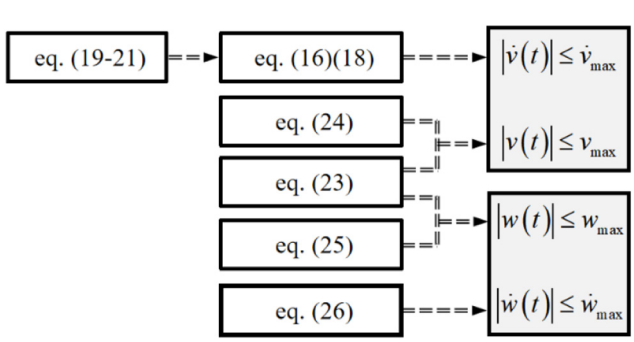




Downloaded from http://www.emerald.com/ir/article-pdf/48/1/29/10925789/ir-03-2020-0064en.pdf?getftrtoken=AQECAHi208BE49Ooan9kkhW_Ercy7Dm3ZL_9Cf3qfKAc485ysgAAALcwgbQGCSqGSIb3DQEHBqCBpjCBowIBADCB

Industrial Robot: the international journal of robotics research and application
Volume 48 • Number 1 • 2021 • 29 – 44

**Figure 5** Overall structure of the proposed control system

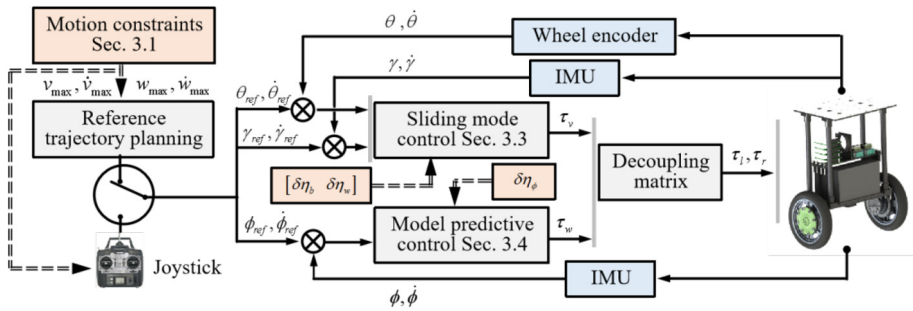


$$\mathbf{c}[1]\cdot\tilde{\mathbf{x}}_{\mathbf{v}}[2]+\mathbf{c}[2]\cdot\dot{\tilde{\mathbf{x}}}_{\mathbf{v}}[2]+\mathbf{c}[3]\cdot\tilde{\mathbf{x}}_{\mathbf{v}}[4]+\dot{\tilde{\mathbf{x}}}_{\mathbf{v}}[4]=-\varepsilon\cdot\mathrm{sgn}(s) \tag{32}$$

By substituting the state-space equation (29) into equation (31), the following equation can be derived:

$$\begin{aligned}&\mathbf{c}[1]\cdot\tilde{\mathbf{x}}_{\mathbf{v}}[2]+\mathbf{c}[2]\cdot\left[\hat{\boldsymbol{f}}_{\boldsymbol{b}}+\hat{\boldsymbol{g}}_{\boldsymbol{b}}\cdot(\mathbf{u}[1]+\delta\,\eta_b)\right]+\mathbf{c}[3]\\&\cdot\tilde{\mathbf{x}}_{\mathbf{v}}[4]+\hat{\boldsymbol{f}}_{\boldsymbol{w}}+\hat{\boldsymbol{g}}_{\boldsymbol{w}}\cdot(\mathbf{u}[1]+\delta\,\eta_w)\\&=-\varepsilon\cdot\mathrm{sgn}(s)\end{aligned} \tag{33}$$

Solving equation (33), the desired control torque is:

$$\begin{aligned}\tau_v=-(c_2\hat{\boldsymbol{g}}_{\boldsymbol{b}}+\hat{\boldsymbol{g}}_{\boldsymbol{w}})^{-1}\Big(&c_1\tilde{x}_2+c_2\hat{\boldsymbol{f}}_{\boldsymbol{b}}+c_3\tilde{x}_4+\hat{\boldsymbol{f}}_{\mathbf{w}}+\varepsilon\cdot\mathrm{sgn}(s)\\&+c_2\hat{\boldsymbol{g}}_{\boldsymbol{b}}\delta\,\eta_b+\hat{\boldsymbol{g}}_{\boldsymbol{w}}\delta\,\eta_w\Big)\end{aligned} \tag{34}$$

where $\varepsilon$ is selected as:

$$\varepsilon=\varepsilon_b+\varepsilon_w+\varepsilon_0 \tag{35}$$

In equation (35), $\varepsilon_b$ and $\varepsilon_w$ are the upper bound of $|c_2\hat{}\boldsymbol{g}_b\delta\,\eta_b|$ and $|\hat{}\boldsymbol{g}_w\delta\,\eta_w|$, respectively. $\varepsilon_0$ is a positive constant. Note that $\varepsilon$ must contain the bounds of lumped model uncertainty terms to guarantee that the state can asymptotically approach the sliding surface (Xu *et al.*, 2014; Zhang *et al.*, 2019).

### 3.4 Rotational motion control

As for the rotational motion, the TWIP robot can be considered as a fully actuated sub-system, as it has only one DoF and one virtual control input $\mathbf{u}[2]=\tau_w$. The state vector $\mathbf{x}_{\mathbf{w}}=[x_5,x_6]^{\mathrm{T}}=[\mathbf{q}[3],\dot{\mathbf{q}}[3]]^{\mathrm{T}}$ only includes two elements, the rotational angle and rotational velocity. Define $\mathbf{x}_{\mathbf{w,ref}}=[x_{5,ref},x_{6,ref}]^{\mathrm{T}}=\left[\phi_{ref},\dot{\phi}_{ref}\right]^{\mathrm{T}}$ as the reference state vector from the planned motion trajectory. These two reference states should satisfy $\phi_{ref}=\int\dot{\phi}_{ref}dt$ to ensure stable. Hence, $\tilde{\mathbf{x}}_{\mathbf{w}}=\mathbf{x}_{\mathbf{w}}-\mathbf{x}_{\mathbf{w,ref}}=[\tilde{x}_5,\tilde{x}_6]^{\mathrm{T}}$ is the state error vector. The state-space equation for rotational motion can be expressed as:

$$\dot{\tilde{\mathbf{x}}}_{\mathbf{w}}=\hat{\mathbf{f}}_{\mathbf{w}}+\hat{\mathbf{g}}_{\mathbf{w}}\cdot(\mathbf{u}[2]+\boldsymbol{\delta\eta}_{\mathbf{w}}) \tag{36}$$

with

$$\hat{\mathbf{f}}_{\mathbf{w}}=\begin{bmatrix}\tilde{x}_6\\0\end{bmatrix}\in\mathrm{R}^2,\quad\hat{\mathbf{g}}_{\mathbf{w}}=\begin{bmatrix}0\\\hat{\boldsymbol{g}}_{\boldsymbol{\phi}}\end{bmatrix}\in\mathrm{R}^2,\quad\boldsymbol{\delta\eta}_{\mathbf{w}}=\begin{bmatrix}0\\\delta\,\eta_{\phi}\end{bmatrix}\in\mathrm{R}^2 \tag{37}$$

The observer equation is selected as:

$$\mathrm{y}=[0,1]\tilde{\mathbf{x}}_{\mathbf{w}} \tag{38}$$

MPC is a type of control method concerning how to find an optimal control sequences over the future finite horizon of $N$ steps. Discrete equation (36) with sampling time $\mathbf{T}$, and then the difference equation form of it can be expressed as:

$$\tilde{\mathbf{x}}_{\mathbf{w,k+1}}=\hat{\mathbf{f}}_{\mathbf{w}}(\tilde{\mathbf{x}}_{\mathbf{w,k}})+\hat{\mathbf{g}}_{\mathbf{w}}(\tilde{\mathbf{x}}_{\mathbf{w,k}})\cdot\mathbf{u}[2]+\boldsymbol{\delta\eta}_{\mathbf{w}}(\tilde{\mathbf{x}}_{\mathbf{v,k}}) \tag{39}$$

where both $\hat{\mathbf{f}}_{\mathbf{w}}(\tilde{\mathbf{x}}_{\mathbf{w,k}})$ and $\hat{\mathbf{g}}_{\mathbf{w}}(\tilde{\mathbf{x}}_{\mathbf{w,k}})$ are nonlinear function with respect to $\tilde{\mathbf{x}}_{\mathbf{w,k}}$. $\boldsymbol{\delta\eta}_{\mathbf{w}}(\tilde{\mathbf{x}}_{\mathbf{w,k}})$ is a bounded uncertainty terms at the instant of $\mathbf{k}$. Select $N$ as the number of the predictive horizon. The standard form of the MPC model can be written as:

$$\tilde{\mathbf{X}}_{\mathbf{w,k}}=\hat{\mathbf{F}}_{\mathbf{w}}+\hat{\mathbf{G}}_{\mathbf{w}}\cdot\boldsymbol{\tau}_{\mathbf{w,k}}+\hat{\mathbf{D}}_{\mathbf{w}} \tag{40}$$

with

$$\hat{\mathbf{F}}_{\mathbf{w}}=\begin{bmatrix}\hat{\mathbf{f}}_{\mathbf{w}}(\tilde{\mathbf{x}}_{\mathbf{w,k}})\\\hat{\mathbf{f}}_{\mathbf{w}}(\tilde{\mathbf{x}}_{\mathbf{w,k+1}})\\\vdots\\\hat{\mathbf{f}}_{\mathbf{w}}(\tilde{\mathbf{x}}_{\mathbf{w,k+N-1}})\end{bmatrix}\in\mathrm{R}^{\mathrm{N}},$$

$$\hat{\mathbf{G}}_{\mathbf{w}}=\begin{bmatrix}\hat{\mathbf{g}}_{\mathbf{w}}(\tilde{\mathbf{x}}_{\mathbf{w,k}})&0&\cdots&0\\\hat{\mathbf{g}}_{\mathbf{w}}(\tilde{\mathbf{x}}_{\mathbf{w,k+1}})&\hat{\mathbf{g}}_{\mathbf{w}}(\tilde{\mathbf{x}}_{\mathbf{w,k+1}})&\cdots&0\\\vdots&\vdots&\ddots&\vdots\\\hat{\mathbf{g}}_{\mathbf{w}}(\tilde{\mathbf{x}}_{\mathbf{w,k+N-1}})&\hat{\mathbf{g}}_{\mathbf{w}}(\tilde{\mathbf{x}}_{\mathbf{w,k+N-1}})&\cdots&\hat{\mathbf{g}}_{\mathbf{w}}(\tilde{\mathbf{x}}_{\mathbf{w,k+N-1}})\end{bmatrix}\in\mathrm{R}^{\mathrm{N}\times\mathrm{N}},$$

$$\hat{\mathbf{D}}_{\mathbf{w}}=\begin{bmatrix}\boldsymbol{\delta\eta}_{\mathbf{w}}(\tilde{\mathbf{x}}_{\mathbf{w,k}})\\\boldsymbol{\delta\eta}_{\mathbf{w}}(\tilde{\mathbf{x}}_{\mathbf{w,k+1}})\\\vdots\\\boldsymbol{\delta\eta}_{\mathbf{w}}(\tilde{\mathbf{x}}_{\mathbf{w,k+N-1}})\end{bmatrix}\in\mathrm{R}^{\mathrm{N}}$$

$$\boldsymbol{\tau}_{\mathbf{w,k}}=\left[\tau_{w,k+1},\tau_{w,k+2},\tau_{w,k+3},\cdots,\tau_{w,k+N}\right]^{\mathbf{T}}\in\mathrm{R}^{\mathrm{N}},$$

$$\tilde{\mathbf{X}}_{\mathbf{w,k}}=\left[\tilde{\mathbf{x}}_{\mathbf{w,k+1}}\quad\tilde{\mathbf{x}}_{\mathbf{w,k+2}}\quad\cdots\quad\tilde{\mathbf{x}}_{\mathbf{w,k+N}}\right]^{\mathbf{T}}\in\mathrm{R}^{\mathrm{N}} \tag{41}$$

The MPC is used to solve the optimization problem in finite horizon, while considering several physical constraints, with standard form expressed as:



Downloaded from http://www.emerald.com/ir/article-pdf/48/1/29/10925789/ir-03-2020-0064en.pdf?getftrtoken=AQECAHi208BE49Ooan9kkhW_Ercy7Dm3ZL_9Cf3qfKAc485ysgAAALcwgbQGCSqGSIb3DQEHBqCBpjCBowIBADCB

Industrial Robot: the international journal of robotics research and application
Volume 48 • Number 1 • 2021 • 29 – 44

$$\begin{aligned}
&\min_{\tau_{w,j}\in\tau_{\mathbf{w},\mathbf{k}}} \sum_{j=k}^{k+N-1} \frac{1}{2}\left(\tilde{\mathbf{x}}_{\mathbf{w},\mathbf{j}}\mathbf{Q}\tilde{\mathbf{x}}_{\mathbf{w},\mathbf{j}}^{T} + R\tau_{w,j}^{2}\right)\\
&\text{subject to}\\
&\quad |v_k| \le v_{k,max}, \quad k=1,2,3,\cdots\\
&\quad |w_k| \le w_{k,max}, \quad k=1,2,3,\cdots\\
&\quad |\dot{w}_k| \le \dot{w}_{k,,max}, \quad k=1,2,3,\cdots\\
&\quad |\delta\eta_{\phi}| \le \frac{\kappa_{f\phi}+\kappa_{g\phi}+\kappa_{h\phi}}{|\hat{\boldsymbol{g}}_{\phi}(\mathbf{q},\dot{\mathbf{q}})|_{\min}}
\end{aligned} \tag{42}$$

To solve equation (42), the QP method is exploited to obtain the optimal control torque for rotational motion, which has been used by Yue *et al.* (2016) and Li *et al.* (2016).

## 4. Experimental verification

### 4.1 Experimental platform

WIP-Bot is a TWIP-type robotic platform designed in our laboratory to verify various advanced self-balance control algorithm, as shown in Figure 6. The driving wheels of robot adopt BLDC motors to guarantee stable torque output within a large velocity scale, which is also widely adopted as joint actuators of legged robots. In addition, the RV reducer with a 19:1 ratio is selected to enlarge output torque of driving wheel and reduce rotational speed. Also, a Li-bo battery is customized with the capacity up to 30 Ah, enabling robot to move continuously more than 2 h. The wheel angular velocity and position are measured by magnetic encoders. The IMU sensor including three-axis accelerometer and gyroscope, installed at the bottom of inverted pendulum, can be used to obtain the angular rate and linear acceleration. The tilt angle can be computed via the integration of angular rate from gyroscope, but it will drift away from the real value as time goes by. A feasible approach to solve this issue is to fuse the tilt angle computed from the accelerometer by means of Kalman filter (Dai *et al.*, 2015) or complementary filter. In this literature, the Kalman filter is used following the works done by Dai *et al.* (2015) to obtain the optimal value of tilt angle based on sensor information from IMU. The BLDC wheel motors are controlled by means of control torque, which is almost proportional to current, represented by $\tau = K_t \cdot I$. $I$ is the motor current. $K_t$ is the torque constant determined by the physical property of wheel motor. Note that two universal wheels are added to the front and back of the TWIP robot base to prevent it from falling down. The universal wheels are installed at a certain height of 8 cm above ground. Even though this distance may change depending on tilt angle of body, as the robot leans forward or backward, the universal wheel will not touch ground in normal work, because of the fact that the tilt angle can be controlled within a small range in experiment.

The dynamic parameters of WIP-Bot measured by Solidworks software are listed in Table 2. The parameter uncertainty caused by unmeasurable wires, screw and other small components of body is estimated. The following parameters can be therefore computed as $m_{bb} = 1.8111$, $m_{bw} = 0.7073$, $m_{ww} = 0.8327$ and $n_{bw} = 49.5125$. By combining equations (8) and (10), the boundary of uncertainty terms in equation (9) can be calculated as listed in Table 3. Then, combining equations (11) and (13), the final inequation of lumped model uncertainty boundary can be represented by equation (14) with the range of lumped model uncertainty terms indicated in Table 4. Furthermore, the motion restrictions for both longitudinal and rotational velocity as well as

**Figure 6** WIP-Bot robotic system

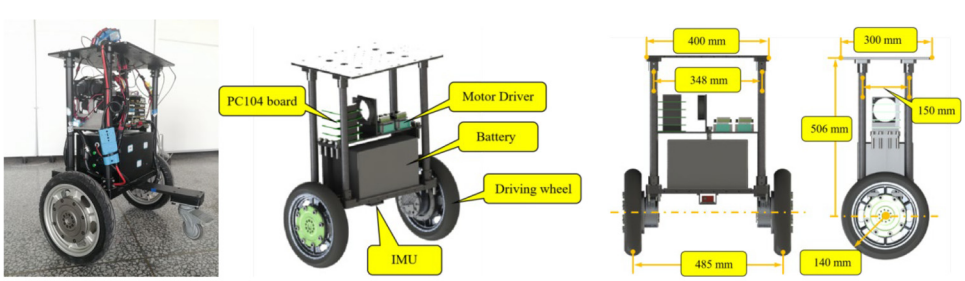


**Notes:** Left: the physical prototype; middle: the model in 3D; right: the model in frontal and lateral view

**Table 2** Dynamics parameters of WIP-Bot robotic system

| Parameter | Explanation | Value | Unit |
|---|---|---|---|
| $m_b$ | Mass of the intermediate body | 30.62 ± 0.5 | kg |
| $m_w$ | Mass of the driving wheel | 3.193 ± 0.1 | kg |
| $I_b$ | Moment of inertia of body with respect to CoM of intermediate body | 0.9775 ± 0.01 | kg • $m^2$ |
| $I_{bz}$ | Moment of inertia of body with respect to $\mathbf{Z_I}$ axis | 0.6245 ± 0.01 | kg • $m^2$ |
| $I_w$ | Moment of inertia of wheel with respect to wheel axis | 0.0537 ± 0.001 | kg • $m^2$ |
| $I_{wz}$ | Moment of inertia of wheel with respect to wheel diameter | 0.0321 ± 0.001 | kg • $m^2$ |
| $l_c$ | Distance between wheel axis and CoM of the intermediate body | 0.1646 ± 0.01 | m |
| $r$ | Radius of the driving wheel | 0.14 ± 0.005 | m |
| $b$ | Half of the distance between wheel center of left and right wheels | 0.24 ± 0.015 | m |



Downloaded from http://www.emerald.com/ir/article-pdf/48/1/29/10925789/ir-03-2020-0064en.pdf?getftrtoken=AQECAHi208BE49Ooan9kkhW_Ercy7Dm3ZL_9Cf3qfKAc485ysgAAALcwgbQGCSqGSIb3DQEHBqCBpjCBowIBADCB

Industrial Robot: the international journal of robotics research and application
Volume 48 • Number 1 • 2021 • 29 – 44

**Table 3** Boundary of uncertainty terms in equation (10)

| Parameter | Value | Parameter | Value |
|---|---|---|---|
| $\kappa_{fb}$ | 0.2906 | $\kappa_{hb}$ | −0.0013 |
| $\kappa_{fw}$ | −0.4248 | $\kappa_{hw}$ | 0.03 |
| $\kappa_{f\phi}$ | 0 | $\kappa_{h\phi}$ | 0.05 |
| $\kappa_{gb}$ | 0.029 | $\lvert\hat{\mathbf{g}}_{\mathbf{b}}(\mathbf{q},\dot{\mathbf{q}})\rvert_{\min}$ | −1.5066 |
| $\kappa_{gw}$ | −0.0793 | $\lvert\hat{\mathbf{g}}_{\mathbf{w}}(\mathbf{q},\dot{\mathbf{q}})\rvert_{\min}$ | 2.4638 |
| $\kappa_{g\phi}$ | −0.0607 | $\lvert\hat{\mathbf{g}}_{\phi}(\mathbf{q},\dot{\mathbf{q}})\rvert_{\min}$ | 0.9465 |

**Table 4** Range of lumped model uncertainty terms

| Lumped model uncertainty term | Range |
|---|---|
| $\delta\eta_b$ | −0.2112 to 0.2112 Nm |
| $\delta\eta_w$ | −0.1924 to 0.1924 Nm |
| $\delta\eta_\phi$ | −0.0640 to 0.0640 Nm |

**Table 5** Restriction of motion velocity and acceleration

| Motion parameter | Value |
|---|---|
| $v_{\max}$ | 1.5 m/s |
| $\dot{v}_{max}$ | 0.45 rad/s$^2$ |
| $w_{\max}$ | 3.0 rad/s |
| $\dot{w}_{max}$ | 2.0 rad/s$^2$ |

**Table 6** SMC Control coefficients

| Gain | $c_1$ | $c_2$ | $c_3$ | $c_4$ | $\varepsilon$ |
|---|---|---|---|---|---|
| Value | 100 | 15 | 2 | 2.5 | 30 |

**Table 7** LQR coefficients

| Gain | $K_{lqr,1}$ | $K_{lqr,2}$ | $K_{lqr,3}$ | $K_{lqr,4}$ | $K_{lqr,5}$ | $K_{lqr,6}$ |
|---|---|---|---|---|---|---|
| Value | 99.22 | 18.99 | 5.48 | 4.98 | 49.32 | 77.55 |

acceleration is computed following the procedure illustrated in Figure 4. The final computation results are indicated in Table 5.

At first, we restate the hypothesis that there is no slipping or skidding occurred between wheel and ground to satisfy the friction constraint condition. Hence, it is reasonable to calculate distance of robot moved on ground via measurements of wheel encoder in the following experiments. Once the initial position of robot is known in advance, the final position or location of robot can be specified through the integration of average distance of both wheels during motion process. Table 6 illustrates the SMC controller parameters used in experiment. The controller parameters of MPC are selected as $N = 10$, $Q = 100$ and $R = 0.1$.

To demonstrate the validity of the proposed approach, the well-known LQR is adopted in WIP-Bot to perform the same experiment as a comparison. Xu *et al.* (2014) and Huang *et al.* (2014) also use it to compare the experimental effect with their proposed method. The goal of LQR is to achieve the weighted minimum of state errors and control inputs

$$\mathbf{J}=\frac{1}{2}\int_0^\infty\left(\mathbf{x}^{\mathbf{T}}\mathbf{Q}\mathbf{x}+\mathbf{u}^{\mathbf{T}}\mathbf{R}\mathbf{u}\right)\mathrm{d}t \tag{43}$$

where $\mathbf{Q}\in \mathrm{R}^{6\times 6}$ and $\mathbf{R}\in R^{2\times 2}$ are positive matrix. The state vector is selected as $\mathbf{x} = [\mathbf{x_v};\mathbf{x_w}]^{\mathrm{T}} = [x_1,x_2,x_3,x_4,x_5,x_6]^{\mathrm{T}}$. The control gain vector and the control input are defined as $\mathbf{K}=\begin{bmatrix} K_{lqr,1} & K_{lqr,2} & K_{lqr,3} & K_{lqr,4} & 0 & 0 \\ 0 & 0 & 0 & 0 & K_{lqr,5} & K_{lqr,6}\end{bmatrix}$ and $\mathbf{u} = \mathbf{K}\cdot\mathbf{x}$, respectively. The control gains are obtained by solving Riccati equation using Matlab with results shown in Table 7.

### 4.2 Experiment I: the Lamniscate trajectory tracking control

In the first experiment, we give a Lamniscate curve trajectory for robot to track, the mathematical expression of which can be described by the following equation:

**Figure 7** Plots of Lamniscate trajectory tracking experiment

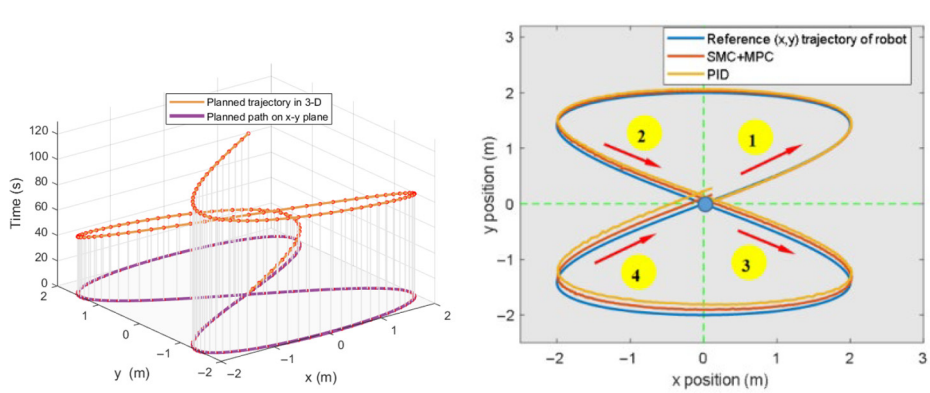


(a) (b)

**Notes:** (a) Reference Lamniscate trajectory incorporating time information; (b) motion path tracking results



Downloaded from http://www.emerald.com/ir/article-pdf/48/1/29/10925789/ir-03-2020-0064en.pdf?getftrtoken=AQECAHi208BE49Ooan9kkhW_Ercy7Dm3ZL_9Cf3qfKAc485ysgAAALcwgbQGCSqGSIb3DQEHBqCBpjCBowIBADCB

Industrial Robot: the international journal of robotics research and application
Volume 48 • Number 1 • 2021 • 29 – 44

**Figure 8** Experimental results of the Lamniscate trajectory tracking control

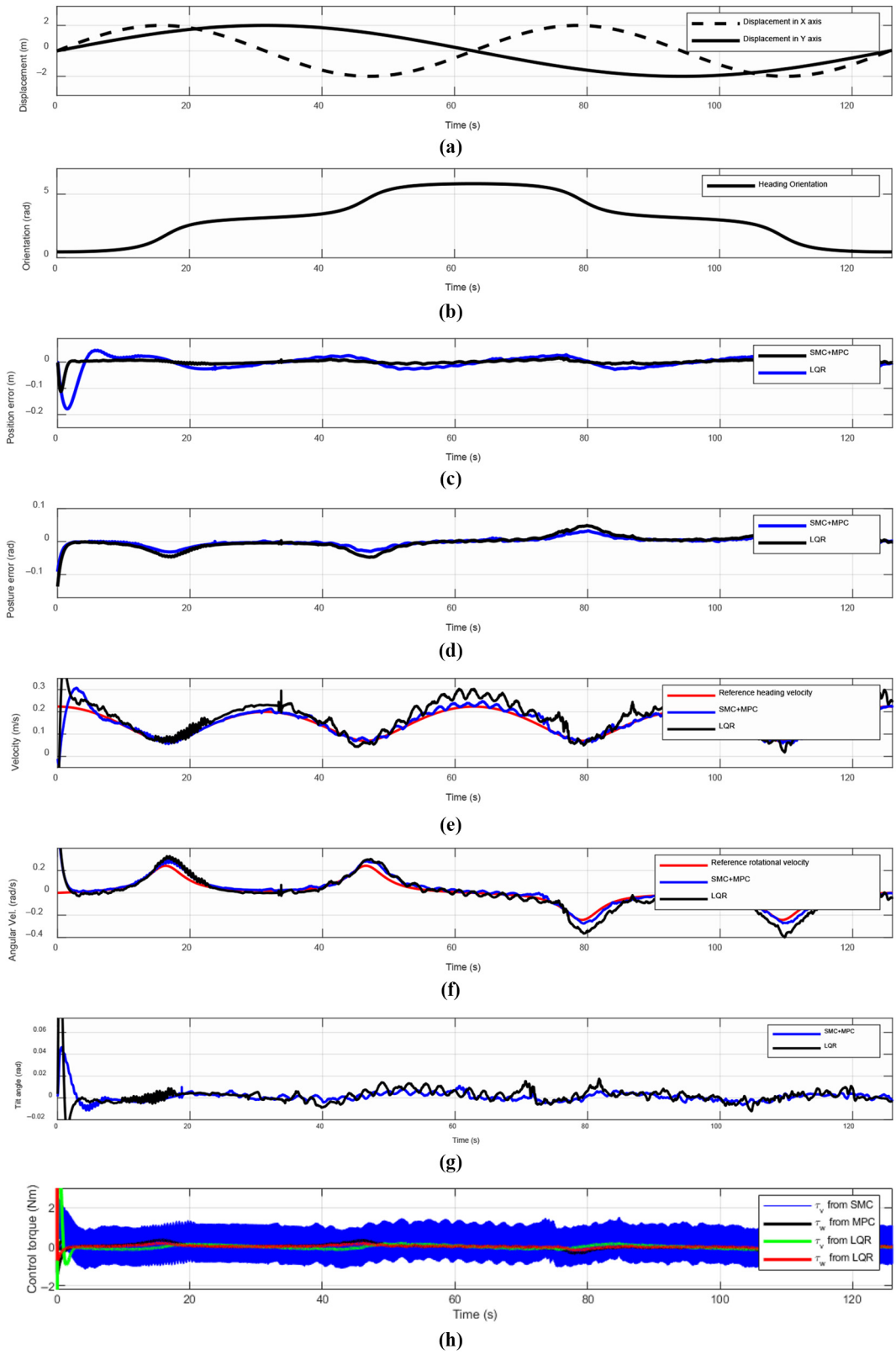




Downloaded from http://www.emerald.com/ir/article-pdf/48/1/29/10925789/ir-03-2020-0064en.pdf?getftrtoken=AQECAHi208BE49Ooan9kkhW_Ercy7Dm3ZL_9Cf3qfKAc485ysgAAALcwgbQGCSqGSIb3DQEHBqCBpjCBowIBADCB

Industrial Robot: the international journal of robotics research and application
Volume 48 • Number 1 • 2021 • 29 – 44

**Figure 9** Point-to-point control experimental setup

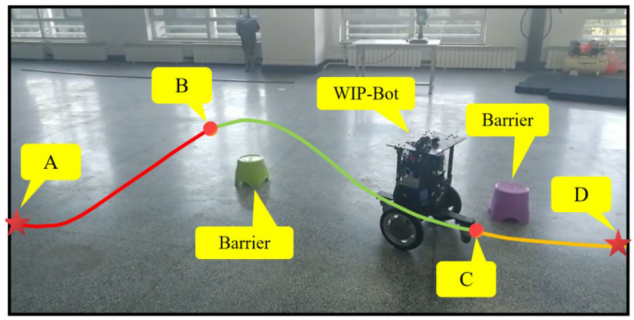


**Table 8** Motion states at four specified points

| | $x_i$ (m) | $y_i$ (m) | $\phi_i$ (rad) | $v_i$ (m/s) | $t_i$ (s) |
|---|---|---|---|---|---|
| $i = A$ | 0 | 0 | 0 | 0 | 0 |
| $i = B$ | 1 | 1.5 | $\pi/3$ | 0.7 | 5 |
| $i = C$ | 3 | 0.5 | $-\pi/6$ | 0.4 | 11 |
| $i = D$ | 4 | 0.3 | 0 | 0 | 16 |

**Table 9** Coefficients of the segmented path

| | $a_0$ | $a_1$ | $a_2$ | $a_3$ | $a_4$ | $a_5$ | $\underline{x}$ |
|---|---|---|---|---|---|---|---|
| $A \to B$ | 0 | 0 | 0 | 8.072 | −10.38 | 3.804 | 0 |
| $B \to C$ | 1.5 | 1.732 | 0 | −3.27 | 2.160 | −0.404 | 1 |
| $C \to D$ | 0.5 | −0.577 | 0 | 1.464 | −1.628 | 0.532 | 3 |

$$\begin{aligned} x_w &= 2\sin(t/10) \\ y_w &= 2\sin(t/20) \end{aligned} \tag{44}$$

where $(x_w, y_w)$ is the reference coordinate of the midpoint between these two wheels. From equation (44), we can compute the heading angle of the robot as:

$$\phi = \operatorname{atan}\left(\frac{y_w - y_{w-}}{x_w - x_{w-}}\right) \tag{45}$$

where the subscript "–" indicates the quantity at last sampling time. Also, by taking derivative of equation (44), we can compute the reference forward velocity as:

$$v = \sqrt{(\dot{x}_w)^2 + (\dot{y}_w)^2} \tag{46}$$

Then, the reference rotational velocity is calculated by:

$$w = \frac{\phi - \phi_-}{T} \tag{47}$$

where $T$ is the sampling time. $T$ is set 1 ms in the experiment.

The generated trajectory in equation (44) is illustrated in Figure 7(a) with $z$-axis representing time information. At the beginning of experiment, WIP-Bot is placed at (0,0) on the $x$–$y$ plane. Once receiving starting commands from PC, the robot moves along the curve with its heading direction denoted by four red arrows shown in Figure 7(b). The robot passes through the first, second, third and fourth arrows subsequently. About 125.6 $s$ later, the robot returns to the starting point (0,0). In both experiments, the proposed method and LQR are separately implemented on robot to accomplish the same task.

Figure 8(a)–(h) displays the Lamniscate trajectory tracking results in comparative experiments. Figures 8(a) and 8(b) indicates the displacement along the $x$ and $z$ directions and the heading orientation. Figures 8(c) and 8(d) shows the position and posture error of robot. Figures 8(e) and 8(f) indicates the heading velocity and the rotational velocity tracking results, respectively. From Figure 8(g), we find the proposed method has a relatively smaller tilt angle than LQR. Figure 8(h) shows the required control inputs from the proposed method and LQR. Figure 8 shows the proposed method has a higher trajectory tracking accuracy than LQR. Further, we calculate the velocity and position tracking errors in detail as listed in Tables 10 and 11.

**Figure 10** Plots of multi-segment spline trajectory tracking experiment

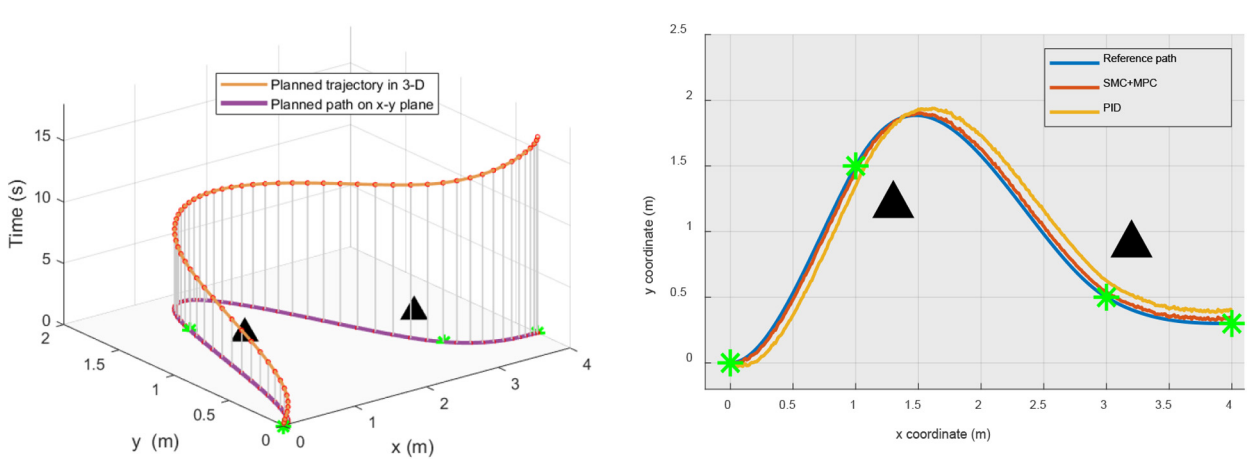


(a) (b)

**Notes:** (a) Reference multi-segment spline trajectory incorporating time information; (b) motion path tracking results.



Downloaded from http://www.emerald.com/ir/article-pdf/48/1/29/10925789/ir-03-2020-0064en.pdf?getftrtoken=AQECAHi208BE49Ooan9kkhW_Ercy7Dm3ZL_9Cf3qfKAc485ysgAAALcwgbQGCSqGSIb3DQEHBqCBpjCBowIBADCB

Industrial Robot: the international journal of robotics research and application
Volume 48 • Number 1 • 2021 • 29 – 44

**Figure 11** Snapshots of motion of WIP-Bot implementing point-to-point control task

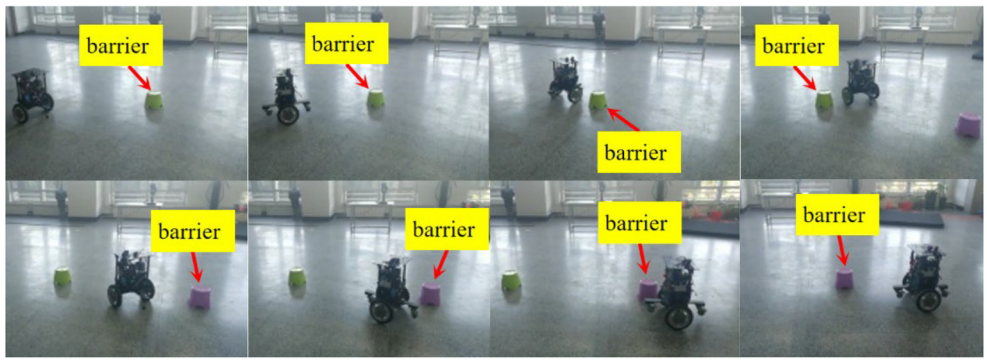


### 4.3 Experiment II: the point-to-point trajectory tracking control

The second experiment is used to simulate its ability of robot to move while avoiding obstacles. We assume a feasible path has been planned in advance via the open-path generator based on detected information from external sensors. As shown in Figure 9, to avoid these two static barriers existing on ground, four target points $A$, $B$, $C$ and $D$ are selected for WIP-Bot to pass through. Therefore, the barrier avoidance task is simplified into the point-to-point trajectory tracking problem in our research. Also, the coordinate of robot, heading orientation, forward velocity and time information at each point should be given, as indicated in Table 8.

After defining these target points, the next step is to generate a feasible trajectory to pass through it. At first, we use six-order spline interpolation to connect adjacent points in the $x$–$y$ plane to ensure smoothness with $y$ as a function of $x$, expressed as:

$$y = a_0 + a_1 \cdot (x - \underline{x}) + a_2 \cdot (x - \underline{x})^2 + a_3 \cdot (x - \underline{x})^3 + a_4 \cdot (x - \underline{x})^4 + a_5 \cdot (x - \underline{x})^5, \quad x \in [\underline{x}, \overline{x}] \tag{48}$$

where $a_0$, $a_1$, $a_2$ and $a_3$ are four coefficients needed to be specified. Based on equation (48), the coefficients of every segmented path between every two adjacent points are given in Table 9.

Once the path in the $x$–$y$ plane has been determined, the following task is to specify motion trajectory incorporating time evolution. We only plan motion trajectory along the $x$ direction, whereas that along the $y$ direction can be therefore computed. Similar to equation (48), the six-order interpolation function is used to plan $x$ trajectory, depicted by:

$$x = b_0 + b_1 \cdot t + b_2 \cdot t^2 + b_3 \cdot t^3 + b_4 \cdot t^4 + b_5 \cdot t^5 \quad t \in [0, t_f] \tag{50}$$

In the experiment, the total time during motion process is selected as $t_f = 16\,s$ to ensure that the motion velocity and acceleration are within restrictions in Table 5.

The generated trajectory in 3D is illustrated in Figure 10(a). The purple multi-segment curve is the generated path on the $x$–$y$ plane, whereas the orange curve is the planned trajectory with $z$-axis as time evolution. The black triangle is the fixed barrier and the green "*" is four target points. The snapshots of motion process of WIP-Bot are shown in Figure 11. Figure 12(a)–(h) shows the point-to-point trajectory tracking experimental results. In Figure 10(a), the reference path is very smooth at the connection points of spline curves, which can avoid jump in velocity and ensure movement stability. Similar to the first experiment, the proposed method possesses a higher precision than LQR to track the reference velocity and position trajectory. The concrete accuracy of experimental results is listed in Tables 10 and 11.

### 4.4 Experiment III: arbitrary movement of WIP-Bot controlled by a joystick

Compared to providing motion command by a predefined trajectory, the direct control of TWIP by a joystick is convenient and effective, especially in the case that the automatic planning and control technique is unable to achieve satisfactory results. However, as the motion signal from the joystick is usually not smooth enough like the planned motion trajectory. Hence, we must impose motion restrictions on this signal from joystick to limit the maximum velocity or acceleration to ensure stability. In the experiment, we control the WIP-Bot to move on a horizontal ground with not only longitudinal movement but also rotational movement. The maximum moving velocity is limited to 0.7 m/s, whereas the rotational velocity is bounded by 1.5 rad/s. The whole moving period is about 100 s. In moving process, there should exist the straight line acceleration or deceleration phase, the single rotational motion phase with respect to a specified point and moving forward while turning with several varied radii. The experimental results are illustrated in Figure 13, including forwarding velocity and angular velocity tracking results with respect to the reference command from the joystick. Also, the tilt angle of inverted pendulum and control torques are also indicated in these figures. Much importantly, we plot the $v$–$w$ relationship to show the motion state during the whole motion process is governed by Figure 3, where the motion state is limited in Area II, demonstrating that the robot can move steadily without the risk of lateral tipping over or other possible failures.

### 4.5 Discussion

As illustrated in Tables 10 and 11, $\Delta v$ and $\Delta w$ are the relative tracking errors of forward velocity and angular velocity of robot. $\Delta x$ and $\Delta y$ are the tracking errors of position trajectory per meter along the $x$ and $y$ directions, respectively. We use the composite error of $\sqrt{\Delta x^2 + \Delta y^2}$ to measure position trajectory accuracy. From Tables 10 and 11, we find that the tracking error in Experiment I is



Downloaded from http://www.emerald.com/ir/article-pdf/48/1/29/10925789/ir-03-2020-0064en.pdf?getftrtoken=AQECAHi208BE49Ooan9kkhW_Ercy7Dm3ZL_9Cf3qfKAc485ysgAAALcwgbQGCSqGSIb3DQEHBqCBpjCBowIBADCB

Industrial Robot: the international journal of robotics research and application
Volume 48 • Number 1 • 2021 • 29 – 44

**Figure 12** Experimental results of the point-to-point control task

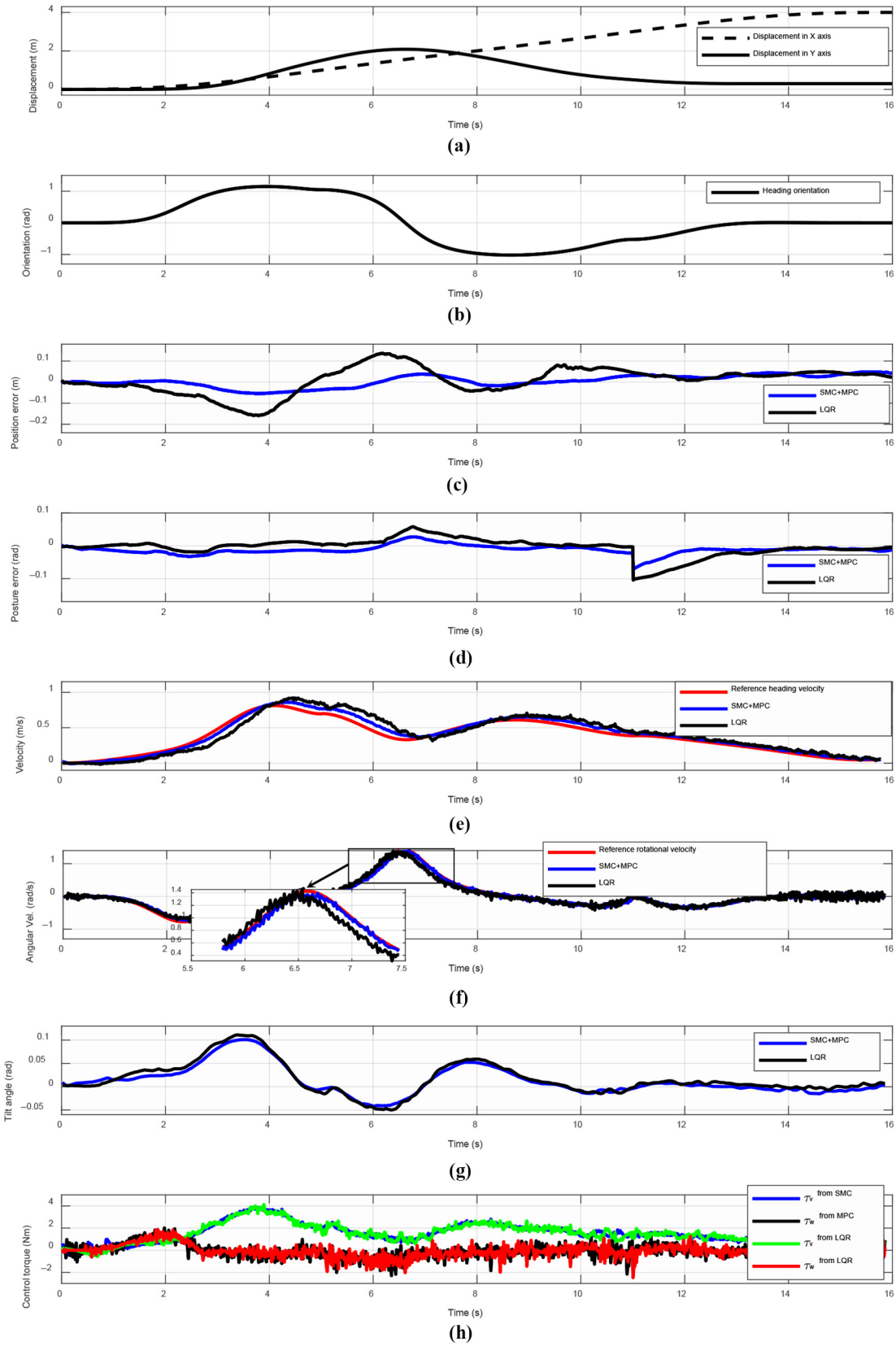




Downloaded from http://www.emerald.com/ir/article-pdf/48/1/29/10925789/ir-03-2020-0064en.pdf?getftrtoken=AQECAHi208BE49Ooan9kkhW_Ercy7Dm3ZL_9Cf3qfKAc485ysgAAALcwgbQGCSqGSIb3DQEHBqCBpjCBowIBADCB

Industrial Robot: the international journal of robotics research and application
Volume 48 • Number 1 • 2021 • 29 – 44

**Table 10** Trajectory tracking accuracy of the proposed method

| | $\Delta v$ | $\Delta w$ | $\sqrt{\Delta x^2 + \Delta y^2}$ $(cm/m)$ |
|---|---|---|---|
| **Experiment I** | 3.51% | 2.12% | 2.14 |
| **Experiment II** | 4.35% | 3.33% | 1.78 |

**Table 11** Trajectory tracking accuracy of LQR

| | $\Delta v$ | $\Delta w$ | $\sqrt{\Delta x^2 + \Delta y^2}$ $(cm/m)$ |
|---|---|---|---|
| **Experiment I** | 7.21% | 5.20% | 4.23 |
| **Experiment II** | 8.52% | 7.44% | 3.82 |

smaller than Experiment II, even though in Experiment II, the reference trajectory is planned via the six-order spline interpolation method to ensure smoothness. One possible reason is that the velocity and acceleration in Experiment II are larger than that in Experiment I. The robotic system is unable to respond quickly to track the desired trajectory.

By comparing Tables 10 and 11, we find the proposed method has a higher accuracy than LQR, even though we have tuned LQR gains carefully according to response of many practical experiments. From control point of view, one reason to affect the control error is model uncertainty and untreated nonlinear terms of dynamics. The SMC control as a nonlinear controller can consider the whole dynamics of robot, even though the tilt angle is far away from the equilibrium position. Also, the lumped model uncertainty has been considered by designing switching coefficients in equation (35) for SMC control and regarded as a constraint condition for MPC. Hence, most of model uncertainties have been alleviated to achieve a higher control accuracy than LQR.

A problem that cannot be ignored in our experiment is the drift of position of robot $v$ because of the reason that the robot cannot detect the path on the ground without a visual sensor. Hence, the position of WIP-Bot is calculated by integration of wheel encoders rather than to directly obtain it by visual sensors, which will bring a larger error. But the experiment

**Figure 13** Experimental results of the arbitrary movement of WIP-Bot controlled by a joystick

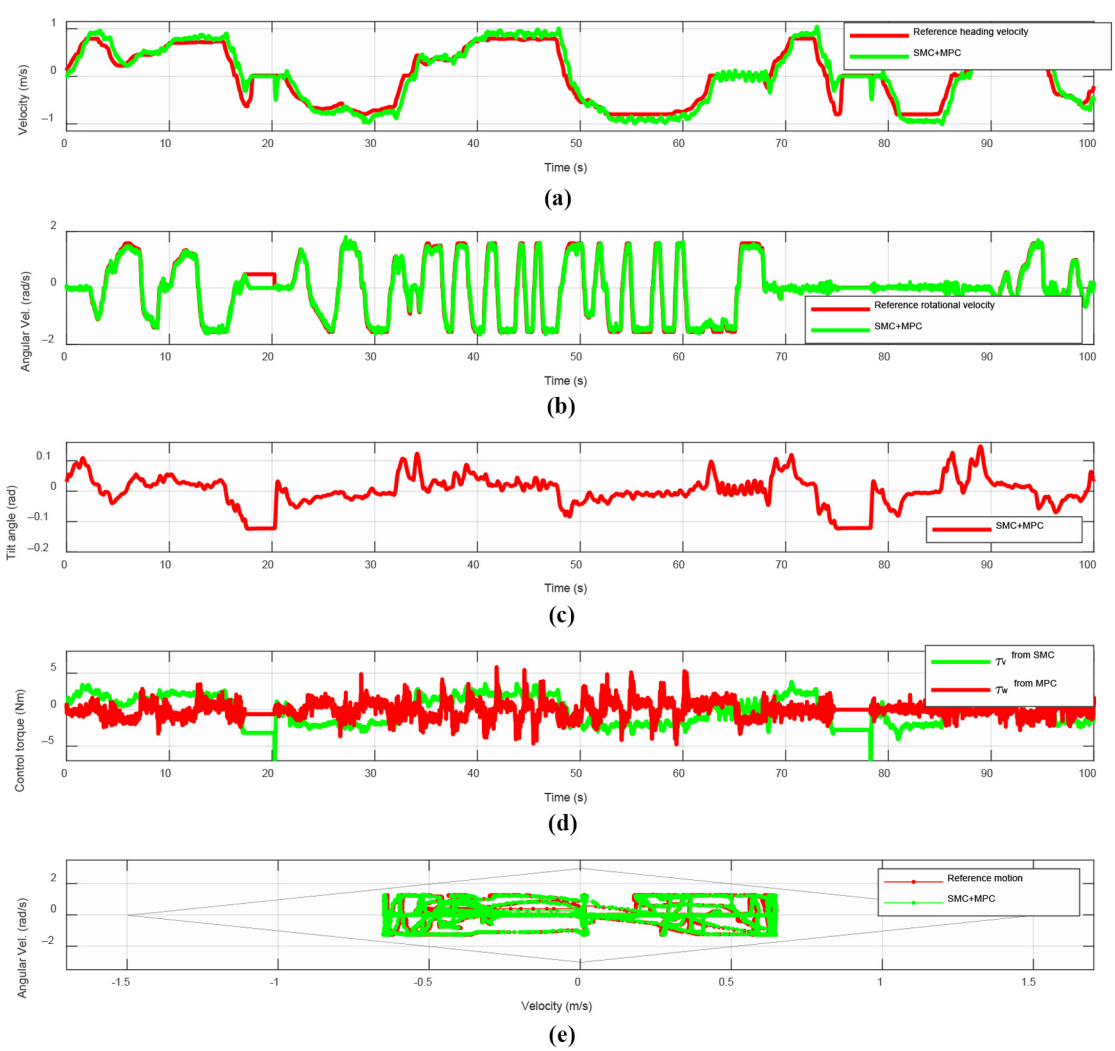




Downloaded from http://www.emerald.com/ir/article-pdf/48/1/29/10925789/ir-03-2020-0064en.pdf?getftrtoken=AQECAHi208BE49Ooan9kkhW_Ercy7Dm3ZL_9Cf3qfKAc485ysgAAALcwgbQGCSqGSIb3DQEHBqCBpjCBowIBADCB

indicates that the drift of position can be limited in an allowable range, when traveling in a short distance.

As for motion restrictions proposed in this paper, it is valid to ensure safety and stability of TWIP during its moving process in 3D as indicated in Experiment III. Especially, when the motion commands are not smooth enough (discontinuity of velocity or acceleration) by means of joystick instead of the motion trajectory generator, it is significantly required to restrict the motion command within the range of the motion restriction conditions, before delivered into the following controllers.

## 5. Conclusion

In this paper, modeling, control design, motion stability and safety of a real TWIP robotics system are explored. The inequality of lumped model uncertainty is derived from original TWIP dynamics, which is used to adjust the SMC coefficients of longitudinal motion. The motion restriction conditions are derived, considering several factors inducing instability and imposed on reference commands to ensure safety. MPC is adopted to design controllers for rotational motion, while taking motion restrictions into account. Three experiments have been conducted on the WIP-Bot robot to track a predefined trajectory or arbitrarily move following the commands from joystick. The higher precision of trajectory tracking is realized, the variation of tilt angle can be limited in a small range and the robot can randomly move on horizontal ground by joystick with safety and stability, which demonstrate the validity of the proposed framework of TWIP. In the future, the trajectory tracking method is expected to enable the TWIP robot to move at a high speed. In addition, the vision or radar equipment will be attached to WIP-Bot to allow it to move avoiding obstacle or implementing various task with a certain level of autonomy.

## References

Brisilla, R.M. and Sankaranarayanan, V. (2015), "Nonlinear control of mobile inverted pendulum", *Robotics and Autonomous Systems*, Vols 70145/70155.

Chan, R.P.M., Stol, K.A. and Halkyard, C.R. (2013), "Review of modelling and control of two-wheeled robots", *Annual Reviews in Control*, Vol. 37 No. 1, pp. 89-103.

Cui, R., Guo, J. and Mao, Z. (2015), "Adaptive backstepping control of wheeled inverted pendulums models", *Nonlinear Dynamics*, Vol. 79 No. 1, pp. 501-511.

Dai, F., Gao, X., Jiang, S., Guo, W. and Liu, Y. (2015), "A two-wheeled inverted pendulum robot with friction compensation", *Mechatronics*, pp. 30116-30125.

Do, K.D. and Seet, G. (2010), "Motion control of a two-wheeled mobile vehicle with an inverted pendulum", *Journal of Intelligent & Robotic Systems*, Vol. 60 Nos 3/4, pp. 577-605.

Dong, W. and Kuhnert, K. (2005), "Robust adaptive control of nonholonomic mobile robot with parameter and nonparameter uncertainties", *IEEE Transactions on Robotics*, Vol. 21 No. 2, pp. 261-266.

Esmaeili, N., Alfi, A. and Khosravi, H. (2017), "Balancing and trajectory tracking of two-wheeled mobile robot using backstepping sliding mode control: design and experiments", *Journal of Intelligent & Robotic Systems*, Vol. 87 Nos. 3/4, pp. 601-613.

Ghaffari, A., Shariati, A. and Shamekhi, A.H. (2016), "A modified dynamical formulation for two-wheeled self-balancing robots", *Nonlinear Dynamics*, Vol. 83 Nos 1/2, pp. 217-230.

Grasser, F., D'Arrigo, A., Colombi, S. and Rufer, A.C. (2002), "JOE: a mobile, inverted pendulum", *IEEE Transactions on Industrial Electronics*, Vol. 49 No. 1, pp. 107-114.

Ha, Y. and Yuta, S. (1996), "Trajectory tracking control for navigation of the inverse pendulum type self-contained mobile robot", *Robotics and Autonomous Systems*, Vol. 17 Nos 1/2, pp. 65-80.

Hirose, N., Tajima, R., Koyama, N., Sukigara, K. and Tanaka, M. (2016), "Following control approach based on model predictive control for wheeled inverted pendulum robot", *Advanced Robotics*, Vol. 30 No. 6, pp. 374-385.

Huang, C.H., Wang, W.J. and Chiu, C.H. (2011a), "Velocity control realisation for a self-balancing transporter", *IET Control Theory & Applications*, Vol. 5 No. 13, pp. 1551-1560.

Huang, J., Ri, S., Liu, L., Wang, Y., Kim, J. and Pak, G. (2015), "Nonlinear disturbance observer-based dynamic surface control of mobile wheeled inverted pendulum", *IEEE Transactions on Control Systems Technology*, Vol. 23 No. 6, pp. 2400-2407.

Huang, J., Wen, C., Wang, W. and Jiang, Z. (2014), "Adaptive output feedback tracking control of a nonholonomic mobile robot", *Automatica*, Vol. 50 No. 3, pp. 821-831.

Huang, C., Wang, W. and Chiu, C. (2011b), "Design and implementation of fuzzy control on a two-wheel inverted pendulum", *IEEE Transactions on Industrial Electronics*, Vol. 58 No. 7, pp. 2988-3001.

Huang, J., Zhang, M., Ri, S., Xiong, C., Li, Z. and Kang, Y. (2020), "High-order disturbance-observer-based sliding mode control for mobile wheeled inverted pendulum systems", *IEEE Transactions on Industrial Electronics*, Vol. 67 No. 3, pp. 2030-2041.

Jeong, S. and Takahashi, T. (2008), "Wheeled inverted pendulum type assistant robot: design concept and mobile control", *Intelligent Service Robotics*, Vol. 1 No. 4, pp. 313-320.

Jleilaty, H.A., Asmar, D. and Daher, N. (2019), "Model reference adaptive control of a two-wheeled mobile robot", *2019 International Conference on Robotics and Automation (ICRA)*.

Kanayama, Y., Kimura, Y., Miyazaki, F. and Noguchi, T. (1990), "A stable tracking control method for an autonomous mobile robot", *1990 International Conference on Robotics and Automation (ICRA)*.

Kim, H.W. and Jung, S. (2016), "Control of a two-wheel robotic vehicle for personal transportation", *Robotica*, Vol. 34 No. 5, pp. 1186-1208.

Kim, S. and Kwon, S. (2020), "Robust transition control of underactuated two-wheeled self-balancing vehicle with semi-online dynamic trajectory planning", *Mechatronics*, Vol. 68102366.

Li, Z., Deng, J., Lu, R., Xu, Y., Bai, J. and Su, C. (2016), "Trajectory-Tracking control of mobile robot systems incorporating neural-dynamic optimized model predictive approach", *IEEE Transactions on Systems, Man, and Cybernetics: Systems*, Vol. 46 No. 6, pp. 740-749.



Downloaded from http://www.emerald.com/ir/article-pdf/48/1/29/10925789/ir-03-2020-0064en.pdf?getftrtoken=AQECAHi208BE49Ooan9kkhW_Ercy7Dm3ZL_9Cf3qfKAc485ysgAAALcwgbQGCSqGSIb3DQEHBqCBpjCBowIBADCB

Li, Z., Gao, W., Goh, C., Yuan, M., Teoh, E.K. and Ren, Q. (2019), "Asymptotic stabilization of nonholonomic robots leveraging singularity", *IEEE Robotics and Automation Letters*, Vol. 4 No. 1, pp. 41-48.

Lin, S., Tsai, C. and Huang, H. (2011), "Adaptive robust self-balancing and steering of a two-wheeled human transportation vehicle", *Journal of Intelligent & Robotic Systems*, Vol. 62 No. 1, pp. 103-123.

Muralidharan, V. and Mahindrakar, A.D. (2014), "Position stabilization and waypoint tracking control of mobile inverted pendulum robot", *IEEE Transactions on Control Systems Technology*, Vol. 22 No. 6, pp. 2360-2367.

Pathak, K., Franch, J. and Agrawal, S.K. (2005), "Velocity and position control of a wheeled inverted pendulum by partial feedback linearization", *IEEE Transactions on Robotics*, Vol. 21 No. 3, pp. 505-513.

Rigatos, G., Busawon, K., Pomares, J. and Abbaszadeh, M. (2020), "Nonlinear optimal control for the wheeled inverted pendulum system", *Robotica*, Vol. 38 No. 1, pp. 29-47.

Takei, T., Imamura, R. and Yuta, S. (2009), "Baggage transportation and navigation by a wheeled inverted pendulum mobile robot", *IEEE Transactions on Industrial Electronics*, Vol. 56 No. 10, pp. 3985-3994.

Tsai, C., Huang, H. and Lin, S. (2010), "Adaptive neural network control of a self-balancing two-wheeled scooter", *IEEE Transactions on Industrial Electronics*, Vol. 57 No. 4, pp. 1420-1428.

Xu, J., Guo, Z. and Lee, T.H. (2013), "Design and implementation of a Takagi–Sugeno-type fuzzy logic controller on a two-wheeled mobile robot", *IEEE Transactions on Industrial Electronics*, Vol. 60 No. 12, pp. 5717-5728.

Xu, J., Guo, Z. and Lee, T.H. (2014), "Design and implementation of integral sliding-mode control on an underactuated two-wheeled mobile robot", *IEEE Transactions on Industrial Electronics*, Vol. 61 No. 7, pp. 3671-3681.

Yue, M., An, C. and Sun, J. (2016), "Zero dynamics stabilisation and adaptive trajectory tracking for WIP vehicles through feedback linearisation and LQR technique", *International Journal of Control*, Vol. 89 No. 12, pp. 2533-2542.

Zhang, M., Huang, J. and Cao, Y. (2019), "Adaptive super-twisting control for mobile wheeled inverted pendulum systems", *Applied Sciences*, Vol. 9 No. 12, p. 2508.

## Further reading

Hirose, N., Tajima, R. and Sukigara, K. (2015), "Personal robot assisting transportation to support active human life – following control based on model predictive control with multiple future predictions", *IEEE International Conference on Intelligent Robots and Systems.*, pp. 5395-5402.

Huang, J., Guan, Z., Matsuno, T., Fukuda, T. and Sekiyama, K. (2010), "Sliding-mode velocity control of mobile-wheeled inverted-pendulum systems", *IEEE Transactions on Robotics*, Vol. 26 No. 4, pp. 750-758.

Huang, C. and Yeh, T.J. (2020), "Anti slip balancing control for wheeled inverted pendulum vehicles", *IEEE Transactions on Control Systems Technology*, Vol. 28 No. 3, pp. 1042-1049.

Li, Z. (2011), "Adaptive fuzzy output feedback motion/force control for wheeled inverted pendulums", *IET Control Theory & Applications*, Vol. 5 No. 10, pp. 1176-1188.

Yue, M., Wei, X. and Li, Z. (2014), "Adaptive sliding-mode control for two-wheeled inverted pendulum vehicle based on zero-dynamics theory", *Nonlinear Dynamics*, Vol. 76 No. 1, pp. 459-471.

Yue, M., An, C. and Li, Z. (2018), "Constrained adaptive robust trajectory tracking for WIP vehicles using model predictive control and extended state observer", *IEEE Transactions on Systems, Man, and Cybernetics: Systems*, Vol. 48 No. 5, pp. 733-742.

## About the author

**Zhou Haitao** Chengdu, China, in 2015. He is currently working toward the PhD degree in electronic engineering in Harbin Institute of Technology, Harbin, China. His research interests include dynamics and control of wheel-legged robot and humanoid robot. Yili Fu is the corresponding author and can be contacted at: meylfu@hit.edu.cn

For instructions on how to order reprints of this article, please visit our website:
**www.emeraldgrouppublishing.com/licensing/reprints.htm**
Or contact us for further details: **permissions@emeraldinsight.com**



Downloaded from http://www.emerald.com/ir/article-pdf/48/1/29/10925789/ir-03-2020-0064en.pdf?getftrtoken=AQECAHi208BE49Ooan9kkhW_Ercy7Dm3ZL_9Cf3qfKAc485ysgAAALcwgbQGCSqGSIb3DQEHBqCBpjCBowIBADCB